City of North Port

Request for Bid No. 2019-40

CRANBERRY BRIDGE CROSSING WATER MAIN REPLACEMENT

City of North Port
FINANCE DEPARTMENT/PURCHASING
DIVISION 4970 CITY HALL BLVD
NORTH PORT, FL 34286
Office: 941.429.7170
Fax: 941.429.7173
Email: purchasing@cityofnorthport.com

NOTICE OF AVAILABILITY OF BID SPECIFICATIONS

REQUEST FOR BID NO. 2019-XX
CRANBERRY BRIDGE CROSSING WATER MAIN REPLACEMENT

The City of North Port is requesting sealed bids to secure the services of an experienced, professional, licensed, and qualified Contractor capable of providing construction services in accordance with specifications to furnish all labor, materials, equipment and incidentals required to construct the City of North Port Cranberry Bridge Crossing Water Main Replacement Project in its entirety as shown on the construction drawings and specified herein.

NON-MANDATORY PRE-BID MEETING: December 13, 2018, AT 10:00 AM
4970 CITY HALL BOULEVARD, ROOM 302, NORTH PORT, FLORIDA
34286

All potential Bidders are recommended to attend the non-mandatory pre-bid conference. The purpose of the Pre-Bid Meeting is to provide a briefing on the City's expectations and performance requirements for submission of Bid documents.

BID OPENING: January 15, 2019 AT 2:00 PM
4970 CITY HALL BOULEVARD, ROOM 302, NORTH PORT, FLORIDA
34286

ALL BIDS ARE DATE AND TIME STAMPED IN THE FINANCE DEPARTMENT, SUITE 337 FIRST AND THEN ARE OPENED IN SUITE 302

Information regarding this project may be viewed and downloaded from Demandstar's website at www.demandstar.com. Links to DemandStar are also available from the city website at www.cityofnorthport.com. Bid specifications are posted on the City FTP site at http://apps.cityofnorthport.com/ftpinfo/dnld_form.aspx *(go to the drop down box, select Purchasing and scroll to Project RFB No. 2019-40*; however, the only place to obtain addenda are on www.demandstar.com . If you have any questions, concerns, or problems accessing the bid package using the link, please contact Keith Raney, Contract Administrator II at 941.429.7103. Requests for additional information or clarification regarding the specifications must be sent via facsimile to 941.429.7173 or via email to purchasing@cityofnorthport.com. No verbal requests will be honored. All questions and clarifications must be submitted via e-mail of facsimile by **January 8, 2019 at 2:00 PM.**

The City of North Port does not discriminate on the basis of race, color, national origin, sex, age, disability, family or religious status in administration of its programs, activities or services.

PUBLISH DATES: November 30, 2018

- Herald Tribune

PUBLISH DATES: November 30, 2018

- www.cityofnorthport.com & www.demandstar.com

TABLE OF CONTENTS

"THIS IS A 'SAMPLE CONTRACT' ISSUED FOR INFORMATIONAL PURPOSES ONLY AND AS SUCH IS SUBJECT TO CHANGE"

SEPARATE INDIVIDUAL ATTACHMENTS:

Go to City FTP site at http://apps.cityofnorthport.com/ftpinfo/dnld_form.aspx (go to the drop-down box, select Purchasing and scroll to Project RFB No. 2019-40)

1A. Technical Specifications (269 pages)
1B. Construction Plans (8 pages)
1C. Bid Schedule (1 page) (in excel format)
1D. Approved Material List

STATEMENT OF NON-SUBMITTAL

If you **do not** intend to submit a bid on this service, please return this form (see information below) immediately.

We, the undersigned, have declined to submit a bid on the requested Request for Bid **2019-40 CRANBERRY BRIDGE CROSSING WATER MAIN REPLACEMENT**

☐ Insufficient time to respond to the Request for Bid.

☐ We do not offer this product/service.

☐ Our schedule would not permit us to perform.

☐ Unable to meet bond/insurance requirements.

☐ Specifications are unclear (explain below).

☐ OTHER (please specify below).

REMARKS: _____

_____

COMPANY NAME: _____

ADDRESS: _____

CITY:_____**STATE:**_____**ZIP CODE:** _____

TELEPHONE:_____ **FAX:** _____

E-MAIL ADDRESS: _____

SIGNATURE:_____**DATE:** _____

Note: "Statement of No Bid" may be faxed or e-mailed to the Purchasing Division at purchasing@cityofnorthport.com or faxed to 941.429.7173.

SECTION I. INSTRUCTIONS TO BIDDERS

THESE CONDITIONS ARE STANDARD FOR ALL BIDS FOR COMMODITIES/SERVICES ISSUED BY THE CITY OF NORTH PORT. THE CITY OF NORTH PORT MAY DELETE, SUPERSEDE OR MODIFY ANY OF THESE GENERAL CONDITIONS FOR A PARTICULAR CONTRACT BY INDICATING SUCH CHANGE IN SPECIAL CONDITIONS TO BIDDERS OR IN THE BID SHEETS. ANY AND ALL SPECIAL CONDITIONS THAT MAY VARY FROM THE GENERAL CONDITIONS SHALL HAVE PRECEDENCE. BIDDER AGREES THAT THE PROVISIONS INCLUDED WITH THIS REQUEST FOR BID SHALL PREVAIL OVER ANY CONFLICTING PROVISIONS WITHIN ANY STANDARD FORM CONTRACT OF THE BIDDER REGARDLESS OF ANY LANGUAGE IN BIDDER'S CONTRACT TO THE CONTRARY.

DEFINITIONS: Terms used in these Instructions to Bidders are defined and have the meanings assigned to them.

- *Addenda:* a written change to a solicitation
- *Bid:* any offer submitted in response to this request for Bid.
- *Bidder:* One that submits a bid in response to this Request for Bid.
- *Bid Documents:* Includes the General Terms and Conditions; Special Conditions; Technical Specifications, the Bid Form; Non-Collusive Affidavit; Public Entity Crime Form; Certificate(s) of Insurance, if required; Payment and Performance Bonds, if required; Corporate Resolution; Bid Bond, if required; Local Business Affidavit, Scrutinized Company Affidavit and Certification and all Addendums issued prior to receipt of bids.
- *City:* Shall refer to City of North Port, a municipal corporation of the State of Florida.
- *Contract*: The agreement to perform the services set forth in this solicitation. The Contract will be comprised of the Bid documents signed by both parties including any addenda and other attachments specifically incorporated.
- *Responsible:* Refers to a bidder that has the capacity and capability to perform the work required under a Request for Bid and is otherwise eligible for award.
- *Responsive:* Refers to a bid that contains no exceptions or deviations from the terms, conditions, and specifications set forth in the Request for Bid.
- *Request for Bid (RFB):* Shall mean this solicitation document, including any and all addenda. A RFB contains well-defined terms, conditions, and specifications, and is awarded to the lowest priced responsive and responsible bidder.
- *Solicitation:* The written document requesting either bids or proposals from the marketplace.
- *Successful Bidder(s):* The lowest responsive, responsible Bidder(s) to whom City (on basis of City's evaluation) makes an award
- *Vendor or Contractor:* A general reference to any entity responding to this solicitation or performing under any resulting Contract.

The City has established for purposes of this Request for Bid (RFB) that the words "shall," "must," or "will" are equivalent and indicate a mandatory requirement or condition, the material deviation from which shall not be waived by the City. A deviation is material if, in the City's sole discretion, the deficient response does not substantially satisfy this RFB's mandatory requirements. The words "should" or "may" are equivalent in this RFB and indicate very desirable conditions, or requirements that are permissive in nature.

1. INSTRUCTIONS TO BIDDERS

A. QUALIFICATIONS OF BIDDER: It is intent to the City to award this Contract to the lowest responsible bidder, qualified by experience and solvency, with proven reliability and the ability to provide the services or items required under this Contract within a reasonable time frame acceptable to the City. Bidder may be required to supply information in writing at the request and discretion of the City prior to award of bids, in order to verify above requirements.

B. EXAMINATION OF BID DOCUMENTS: Prior to submission of a bid form, bidders shall carefully examine the General Terms and Conditions, Special Conditions, Technical Specifications, and all other related bid documents, including all modifications thereof, incorporated in the bid package, plus fully informing themselves as to all existing conditions and limitations that effect the work to be performed under this contract.

Discrepancies, omissions, or questions about the intent of the documents should be submitted to the Purchasing Division in written form as a request for interpretation no later than five business (5) days prior to bid opening (or shall be verbally addressed at the pre-bid conference, if applicable).

It shall be the responsibility of the bidder, prior to submitting their response, to either visit www.demandstar.com to view the solicitation and download all issued addenda or contact Purchasing to determine if addenda were issued.

Examination of site: Prior to submitting a bid form, each bidder may examine the site and all conditions thereon. All bid forms shall be presumed to include all such existing conditions as may affect any work to be done on this project. Failure to familiarize himself with such conditions will in no way relieve the successful bidder from the necessity of furnishing any materials or performing any work that may be required to complete the work in accordance with the drawings and Specifications.

C. CLARIFICATION AND ADDITIONAL INFORMATION: Discrepancies, omissions, or questions about the intent of the documents will be submitted to the City of North Port Purchasing Manager, or his/her designee in written form as a request for interpretation no later than five (5) business days prior to the bid opening (or may be verbally addressed at the pre-bid meeting, if applicable).

Interpretations made will be in the form of an addendum to the documents, which will be forwarded to all bidders. Receipt by each bidder must be acknowledged on the bid form, indicating the addendum number and date of issue, therein becoming part of the Contract. No oral explanations shall be binding. The City will attempt to notify all prospective bidders of addenda issued to the bid documents; however, it shall be the responsibility of the bidder, prior to submitting their bid, to contact the Purchasing Manager, or his/her designee, to determine if addenda were issued, acknowledging and incorporating it into their bid.

D. MODIFICATION OR WITHDRAWAL OF BIDS: Bid modifications will be accepted from a bidder only if received in writing, properly signed by an officer of the bidder, and received prior to the opening of bids. Bid modifications must be identified as such and will be opened with the bidder's bid form.

Bids may be withdrawn by request of the bidder prior to the time fixed for opening. Error or negligence on the part of the bidder in preparing the bid confers no right for the withdrawal of the bid after it has been opened.

E. NO BID: A respondent who is on the bid notification list and decides not to submit a response is requested to complete the Statement of Non-Submittal Form and return it to the City.

F. CONFLICTS WITHIN SOLICITATION: Where there appears to be a conflict between the General Terms and Conditions, Special Conditions, the Technical Specifications, the Bid Form, or any addendum issued, the order of precedence shall be: the last addendum issued, the Bid Form, the Technical Specifications, the Special Conditions, and then the General Terms and Conditions. It is incumbent upon the vendor to identify such conflicts to the designated purchasing representative prior to the bid or proposal response date.

G. PROMPT PAYMENT: It is the policy of the City that payment for all purchases by the City shall be made in a timely manner and that interest payments will be made on late payments in accordance with Part VII, Chapter 218, Florida Statutes, known as the Local Government Prompt Payment Act. The bidder may offer cash discounts for prompt payments; however, such discounts will not be considered in determining the lowest price during bid evaluation.

2. PREPARATION AND SUBMISSION OF BID FORM

Bid Form: Bids shall be made on forms supplied by the City, or as otherwise specified. Each bid must state the name of the bidder, the bidder's full business address and state the type of business entity, followed by the original signature and designation of the officer or other person authorized to bind the corporation. Any erasures or other corrections in the bid form must be explained or noted over the signature of the bidder. Bid forms containing any conditions, omissions, unexplained erasures, alterations, or irregularities of any kind may be rejected by the City.

Bid Bond: Each bid must be accompanied by a bidder's bond or Cashier's check with their bid in the amount of NOT LESS THAN 5% of their total amount of the bid. This security shall ensure that the Bidder does not revoke the bid after bid opening or fails to execute any necessary additional documents. Cashier's checks will be returned to all bidders after award of bid.

Bid Documents: Bid documents and forms shall be submitted sealed to the City of North Port, Purchasing, 4970 City Hall Boulevard, Suite 337, North Port, Florida 34286. The envelope/package shall be clearly marked with the Bid Number, Name and Business Address of the bidder. All interested firms are required to submit one (1) original and one (1) copy of their completed bid offer.

Submission of a response constitutes a binding offer and shall be subject to all terms and conditions specified in the solicitation.

For your bid to be acceptable, ***all blank spaces*** must be completely annotated where and when requested. All bids must contain a *manual signature* of the authorized representative of the bidder in the space provided on the Bid Certification Form.

Responsibility for getting this bid to the City on or before the specified date and time is solely and strictly the responsibility of the bidder. The City will not be responsible for any delay, for any reason whatsoever. Bids must be received and stamped with the date and time on the outside of the envelope and must be in the City Purchasing Office by the date and time specified for opening.

Bids postmarked prior to said date and time but not received shall not be considered and will be returned to bidder unopened.

Bid Guarantee: The bid form shall be signed where indicated constituting an agreement that the bidder will not withdraw his/her bid for a period of ninety (90) days after the opening of the bids.

Source of Supply and Subcontractors: Bidders are to complete the attached Source of Supply and Subcontractors form. This form must be completed and included with the bid form. If bidder does not have a source of supply or subcontractor, insert "to be determined". When source or subcontractor is determined, selection will be subject to City approval.

Bid Opening: All bids received by the date and time so specified shall be opened and **the name of each bidder and total bid price of each bidder** read aloud within the designated room at City Hall, at the bid opening. The opening and reading shall be in the presence of the City Clerk and the Purchasing Manager or their designees. Bidders and the general public are not required to be present but are invited and encouraged to attend.

Late Bids: Bids received after the date and time of bid opening will not be considered and will not be opened. It will be the bidder's responsibility to make arrangements for the return of the bid package at their expense.

3. CITY RIGHTS: The City of North Port reserves the right to accept or reject any and/or all bids in whole or in part, to waive irregularities and technicalities, and to request resubmission with or without cause and/or to accept the bid that, in its judgment, will be in the best interest of the City. Also, the City reserves the right to accept all or any part of the bid and to increase or decrease quantities to meet additional or reduced requirement of the City. In the event the city receives only one response; the bid may be either accepted or rejected by the City depending on available competition and the timely needs of the City.

4. AWARD OF BID: The award shall be let to the lowest responsive, responsible bidder who fulfills all criteria and specifications with consideration to favorable references and local preference and whose evaluation by the City indicates that the award will be in the best interest of the City.

5. *Errors:* For the purpose of the initial evaluation of bids, the following will be utilized in resolving arithmetic discrepancies found on the face of the bidding schedule as submitted by bidders:

Obviously misplaced decimal points will be corrected.

In case of discrepancy between unit price and extended price, the unit price will govern. Apparent errors in extension will be corrected.

Apparent errors in addition of lump sum and extended prices will be corrected.

For the purpose of bid evaluation, the City will proceed on the assumption that the bidder intends his/her bid be evaluated on the basis of the unit prices, extensions, and totals arrived at by resolution of arithmetic discrepancies as provided above and the bid will be so reflected on the tabulation of bids.

6. BID TABULATIONS: Pursuant to Florida Statute §119.071(1)(b), all bid tabulations shall be posted in the City Hall, 4970 City Hall Boulevard, North Port, Florida and on DemandStar's website at www.demandstar.com within thirty (30) days after bid opening or at such time as the agency provides notice of a decision or intended decision, whichever is earlier.

7. WARRANTY: All warranties express and implied, shall be made available to the City for goods and services covered by this solicitation. All goods furnished shall be fully guaranteed by the vendor against factory and workmanship defects. At no expense to the City, the vendor shall correct any and all apparent and latent defects that may occur within the manufacturer's standard warranty period. The special conditions of the solicitation may supersede the manufacturer's standard warranty.

8. DESCRIPTIVE INFORMATION: Unless otherwise specifically provided in the Technical specifications, all equipment, materials and articles incorporated in the work covered by this Contract are to be new and of the most suitable grade for the purpose intended. Unless otherwise specifically provided in the Technical specifications, reference to any equipment, material, article or patented process, by trade name, make or catalog number, shall be regarded as establishing a standard of quality and shall not be construed as limiting competition. If the bidder wishes to make a substitution to the specifications, the bidder shall furnish the City the name of the manufacturer, the model number and other identifying data and information necessary to aid in the City in evaluating the substitution. Such substitution shall be subject to City approval. Substitutions shall be approved only if determined by the City to be equivalent to the specifications. A bid containing substitution is subject to disqualification if the City does not approve the substitution.

9. TAXES/FREIGHT: The bid shall include any freight, handling, delivery, surcharges or other incidental charges. Unless otherwise specified in the solicitation, prices quoted shall be F.O.B. Destination. The City is exempt from the payment of Federal and State taxes, including sales tax. The bid offer shall not include sales tax to be collected from the City. The City's sales tax exemption is not available to vendor for items vendor purchases, regardless of whether these items will be transferred to the City.

In the event the project is declared a sales tax recovery project by the City, the following procedure shall apply:

(a) The City representative shall make a recommendation to the Division of Procurement Services regarding the materials to be purchased;

(b) When those materials are purchased by the City, all purchase orders shall be issued directly from Purchasing;

(c) The City shall take title to those materials directly from the manufacturer/supplier and shall bear the risk of loss or damage to the materials which are delivered directly from the manufacturer/ supplier;

(d) The City shall be invoiced directly for the materials from the manufacturer/supplier and shall pay the invoices directly to the manufacturer/supplier, presenting its sales tax exemption certificate at the time of payment.

The cost of any materials purchased through the sales tax recovery program shall be deducted from the Contract amount and the vendor shall no longer be responsible for providing those materials. A written change order shall be executed.

10. CONTINUATION OF WORK: Any work that commences prior to and will extend beyond the expiration date of the current Contract period shall, unless terminated by mutual written agreement between the City and the vendor, continue until completion without change to the then current prices, terms and conditions.

11. TERMINATION OF CONTRACT:

Funding in Subsequent Fiscal Years: It is expressly understood by the City and the vendor that funding for any successive fiscal years of the Contract is contingent upon appropriation of monies by the City Commissioners. In the event that funds are not available or appropriated, the City reserves the right to terminate the Contract. The City will be responsible for payment of any outstanding invoices and work completed by the vendor prior to such termination.

Termination With or Without Cause: The City shall have the right to unilaterally cancel, terminate or suspend this Contract, in whole or in part, by providing the Contractor thirty (30) days written notice by certified mail.

The City reserves the right to terminate this Contract, in part or in whole, in the event the vendor fails to perform in accordance with the terms and conditions stated herein. The vendor will be notified by letter of the City's intent to terminate. In the event of termination for default, the City may procure the required goods and/or services from any source and use any method deemed in its best interest. All re-procurement cost shall be borne by the vendor.

Termination by Vendor: Vendor shall have the right to terminate services only in the event of the City failing to pay Vendor's properly documented and submitted invoice within ninety (90) calendar days of the approval by the City's Administrative Agent, or if the project is suspended by the City for a period greater than ninety (90) calendar days.

12. PROPRIETARY OR CONFIDENTIAL INFORMATION: Bidders are hereby notified that all information submitted as part of, or in support of bid submittals will be available for public inspection after opening of bids in compliance with Chapter 119 of the Florida Statutes, the Public Record Act. The bidder should not submit any information in response to this solicitation which the bidder considers proprietary or confidential. The submission of any information to the City in connection with this solicitation shall be deemed conclusively to be a waiver of any protection from release of the submitted information unless such information is exempt from disclosure under the Public Records Act, and such information is marked as exempt. Failure to mark a trade secret as exempt waives the exemption.

13. RULES, REGULATIONS AND LICENSES: The vendor shall comply with all federal, state, and local laws and

regulations applicable to provision of the goods and/or services specified in this solicitation.

It shall be the responsibility of the Contractor to assure compliance with OSHA, EPA and/or other local, federal, or State of Florida rules, regulations or other requirements, as each may apply.

When applicable and as required by law, the bidder will provide a material safety data sheet with each delivery of a toxic substance.

The vendor shall maintain books, records, documents, and other evidence directly pertaining to or connected with the services under this Agreement which shall be available and accessible at the vendor's offices for the purpose of inspection, audit, and copying during normal business hours by the CITY, or any of its authorized representatives. Such records shall be retained for a minimum of five (5) years after completion of the services.

14. CODE OF ETHICS: With respect to this bid, if any bidder violates or is a party to a violation of the Florida Statutes, Chapter 112, Part III, Code of Ethics for Public Officers and Employees, such bidder may be disqualified from furnishing the goods or services for which the bid is submitted and shall be further disqualified from submitting any future bids for goods or services for the City.

15. COLLUSION: By offering a submission to this RFB, the bidder certifies that the bidder has not divulged to, discussed or compared his/her bid with other bidders and has not colluded with any other bidder or parties to this bid whatsoever. Also, bidder certifies, and in the case of a joint bid each party thereto certifies as to his/her own organization, that in connection with this bid: any prices and/or cost data submitted have been arrived at independently, without consultation, communication, or agreement, for the purpose of restricting competition, as to any matter relating to such prices and or cost data, with any other bidder or with any competitor; any prices and/or data quoted for this bid have not been knowingly disclosed by the bidder and will not knowingly be closed by the bidder prior to the scheduled opening directly or indirectly to any other bidder or to any competitor; no attempt has been made or will be made by the bidder to induce any other person or firm to person or persons interested in this bid, principal or principals is/are named therein and that no person other than therein mentioned has any interest in this bid or in the Contract to be entered into; and no person or agency has been employed or retained to solicit or secure this Contract upon an agreement or understanding for a commission, percentage, brokerage, or contingent fee excepting bona fide employees of the bidder.

16. PUBLIC ENTITY CRIMES: In accordance with Florida Statutes Sec. 287.133(2)(a), "A person or affiliate who has been placed on the convicted vendor list following a conviction for a public entity crime may not submit a bid on a Contract to provide any goods/services to public entity, may not submit a bid on a Contract with a public entity for construction or repair of public building or public work, may not submit bids on leases of real property to a public entity, may not be awarded or perform work as a Contractor, supplier, subcontractor, or consultant under a Contract with any public entity, and may not transact business with any public entity in excess of the threshold amount provided in Sections 287.017, for Category Two, for a period of 36 months from the date of being placed on the convicted vendor list." By submitting a bid, vendor certifies that vendor is not currently prohibited from transacting business with the City due to the above statute. The vendor shall comply with the terms of this statute both before and during the term of this Contract.

17. DRUG FREE WORKPLACE PREFERENCE: The City has adopted a policy in observation of the Drug Free Workplace Act of 1988. Therefore, it is unlawful to manufacture, distribute, dispense, possess, or use any controlled substance in the City workplace.

The City requests that the attached Drug Free Workplace Affidavit accompany the bid response. This form has been adopted by the City in accordance with the Drug Free Workplace Act. The City will not disqualify any bidder who does not sign the affidavit. The Drug Free Workplace Affidavit is primarily used as a tie breaker when two or more separate entities have submitted bids at the same price, terms and conditions, with preference given to the bidder who has signed the affidavit.

18. EQUAL EMPLOYMENT OPPORTUNITY: The City of North Port, Florida, in accordance with the provisions of Title VII of the Civil Rights Act of 1964 (78 Stat. 252) and the Regulations of the Department of Commerce (15 CFR, Part 8) issued pursuant to such Act, hereby notifies all bidders that it will ensure that in any Contract entered into pursuant to this advertisement, minority business enterprises will be afforded full opportunity to submit replies in response to this advertisement and will not be discriminated against on the ground of race, color or national origin in consideration for an award.

19. NON-DISCRIMINATION: The City of North Port does not discriminate on the basis of race, color, national origin, sex, age, disability, family or religious status in administration of its programs, activities or services. Pursuant to F.S §287.134(2)(a), an entity or affiliate who has been placed on the discriminatory vendor list may not submit a bid, proposal, or reply on a contract to provide any goods or services to a public entity; may not submit a bid, proposal, or reply on a contract with a public entity for the construction or repair of a public building or public work; may not submit bids, proposals, or replies on leases of real property to a public entity; may not be awarded or perform work as a Contractor, supplier, subcontractor, or consultant under a contract with any public entity; and may not transact business with any public entity.

20. DECLARATION OF EXEMPTION FROM PUBLIC RECORD: Pursuant to Florida Statute §119.07(1)(b)(2), all bid documents are exempt from public record until such time as the City provides notice of an intended decision or until 30 days after opening the bids, whichever is earlier.

In accordance with Florida Statutes 119.0701, Contractor shall comply with all public records laws, and shall specifically:

20.1. Keep and maintain public records required by the City to perform the service.

a. The timeframes and classifications for records retention requirements must be in accordance with the General Records Schedule GS1-SL for State and Local Government Agencies. (See http://dos.dos.state.fl.us/library-archives/records-management/general-records-schedules/).

b. "Public records" means and includes those items specified in Florida Statutes 119.011(12), as amended from time to time, and currently defined as: All documents, papers, letters, maps, books, tapes, photographs, films, sound recordings, data processing software, or other material, regardless of the physical form, characteristics, or means of transmission, made or received pursuant to law or ordinance or in connection with the transaction of official business with the City. Contractor's records under this Contract include but are not limited to, supplier/subcontractor invoices and contracts, project documents, meeting notes, e-mails and all other documentation generated during this Contract.

20.2. Upon request from the City's custodian of public records, provide the City, at no cost, with a copy of the requested records or allow the records to be inspected or copied within a reasonable time at a cost that does not exceed the cost provided for by law. All records kept electronically must be provided to the City, upon request from the City's custodian of public records, in a format that is compatible with the information technology systems of the City.

20.3. Ensure that project records that are exempt or confidential and exempt from public records disclosure requirements are not disclosed except as authorized by law for the duration of the contract term and, if the Contractor does not transfer the records to City following completion of the contract, for the time period specified in General Records Schedule GS1-SL for State and Local Government

Agencies.

20.4. Upon completion of the contract, transfer, at no cost, to the City all public records in Contractor's possession or keep and maintain public records required by the City to perform the service. If the Contractor transfers all public records to the City upon completion of the contract, the Contractor shall destroy any duplicate public records that are exempt or confidential and exempt from public records disclosure requirements. If the Contractor keeps and maintains public records upon the completion of the contract, the Contractor shall meet all applicable requirements for retaining public records.

20.5. **IF THE CONTRACTOR HAS QUESTIONS REGARDING THE APPLICATION OF CHAPTER 119, FLORIDA STATUTES, TO THE CONTRACTOR'S DUTY TO PROVIDE PUBLIC RECORDS RELATING TO THIS CONTRACT, CONTACT THE CUSTODIAN OF PUBLIC RECORDS AT CUSTODIAN OF PUBLIC RECORDS, 4970 CITY HALL BOULEVARD, NORTH PORT, FLORIDA 34286, 941.429.7063 OR HOTLINE 941.429.7270; E-MAIL: keto@cityofnorthport.com.**

20.6. Failure of the Contractor to comply with these requirements shall be a material breach of this Contract. Further, Contractor may be subject to penalties under Florida Statutes 119.10.

21. FORCE MAJEURE: The parties will exercise every reasonable effort to meet their respective obligations hereunder, but shall not be liable for delays resulting from force majeure or other causes beyond their reasonable control, including, but not limited to, compliance with any Government law or regulation, acts of nature, acts or omissions of the other party, Government acts or omissions, fires, strikes, national disasters, wars, riots, transportation problems and/or any other cause whatsoever beyond the reasonable control of the parties. Any such cause will extend the performance of the delayed obligation to the extent of the delay so incurred.

22. GOVERNING LAWS: The interpretation, effect, and validity of any Contract resulting from this RFB shall be governed by the laws and regulations of the State of Florida. Exclusive venue of any court action shall be in Sarasota County, Florida**.**

23. SUBCONTRACTING: Unless otherwise specified in this solicitation, the vendor shall not subcontract any portion of the work without the prior written consent of the City. The ability to subcontract may be further limited by the Special Conditions. Subcontracting without the prior consent of the City may result in termination of the Contract for default.

24. MODIFICATION OF CONTRACT: Any Contract resulting from this solicitation may be modified by mutual consent of duly authorized parties, in writing through the issuance of a modification to the Contract and/or change order as appropriate. This presumes the modification itself is in compliance with all applicable City procedures.

25. SUCCESSORS AND ASSIGNS: The vendor shall not assign any interest in any Contract resulting from this solicitation and shall not transfer any interest in same (whether by assignment or novation) without prior written consent of the City, except that claims for the money due or to become due to the vendor from the City under any Contract may be assigned to a financial institution or to a trustee in bankruptcy without such approval from the City. Notice of such transfer or assignment due to bankruptcy shall be promptly given to the City.

26. CONTRACTING WITH CITY EMPLOYEES OR BOARD MEMBERS: Any City employee, Board member or member of his or her immediate family seeking to Contract with the City shall seek a conflict of interest opinion from the

purchasing manager or their designated representative prior to submittal of a response or application of any type to Contract with the City. The affected employee or Board member shall disclose his or her assigned function within the City and interest or the interest of his or her immediate family in the proposed Contract and the nature of the intended Contract.

Florida Statute §112.313(12) Standards Of Conduct For Public Officers, Employees Of Agencies, And Local Government Attorneys controls contracting with City employees or board members, and provides as follows:

(12) EXEMPTION. --The requirements of subsections (3) and (7) as they pertain to persons serving on advisory boards may be waived in a particular instance by the body which appointed the person to the advisory board, upon a full disclosure of the transaction or relationship to the appointing body prior to the waiver and an affirmative vote in favor of waiver by two-thirds vote of that body. In instances in which appointment to the advisory board is made by an individual, waiver may be effected, after public hearing, by a determination by the appointing person and full disclosure of the transaction or relationship by the appointee to the appointing person. In addition, no person shall be held in violation of subsection (3) or subsection (7) if:

(b) The business is awarded under a system of sealed, competitive bidding to the lowest or best bidder and:

1. The official or the official's spouse or child has in no way participated in the determination of the bid specifications or the determination of the lowest or best bidder;

2. The official or the official's spouse or child has in no way used or attempted to use the official's influence to persuade the agency or any personnel thereof to enter such a contract other than by the mere submission of the bid; and

3. The official, prior to or at the time of the submission of the bid, has filed a statement with the Commission on Ethics, if the official is a state officer or employee, or with the supervisor of elections of the county in which the agency has its principal office, if the official is an officer or employee of a political subdivision, disclosing the official's interest, or the interest of the official's spouse or child, and the nature of the intended business.

27. TRUTH-IN-NEGOTIATIONS CERTIFICATE: If applicable, execution and signature by the vendor of the Bid Form shall act as the execution of a truth-in-negotiation certificate certifying that the wage rates and costs used to determine the compensation provided for in this Contract are accurate, complete, and current as of the date of the Contract.

For professional service Contracts, the original Contract price and any additions thereto will be adjusted to exclude any significant sums by which the City determines the Contract price was increased due to inaccurate, incomplete, or noncurrent wage rates and other factual unit costs. The City shall exercise its rights under this "Certificate" within one (1) year following payment.

28. GRANT FUNDING: In the event any part of the Contract is to be funded by federal, state, or other local agency monies, the vendor hereby agrees to comply with all requirements of the funding entity applicable to the use of the monies, including full application of requirements involving the use of minority firms, women's business enterprises, and labor surplus area firms. Vendors are advised that payments under the Contract may be withheld pending completion and submission of all required forms and documents required of the vendor pursuant to the grant funding requirements. A copy of the requirements shall be supplied to the vendor by the City upon request.

29. PERFORMANCE/PAYMENT BOND: The successful bidder shall provide the required performance and payment bond or other acceptable security to the City within **ten (10) business days of being awarded the bid. Failure by the successful bidder to provide the bond within ten (10) business days shall be considered a default under Sec. 2-404**

of the City of North Port Administrative Code. Such default shall only be curable at the option of the City. In addition, the Contractor shall be responsible and bear all costs associated to record Performance and Payment Bond with Sarasota County Clerk's Office. Receipt of said recording and certified copy of the bond shall be furnished to the Purchasing Department at the time of the pre-construction meeting. Such default shall only be curable at the option of the City.

In addition, the Contractor shall be responsible and bear all costs associated to record Performance and Payment Bond with Sarasota County Clerk's Office. Receipt of said recording and certified copy of the bond shall be furnished to the Purchasing Department at the time of the pre-construction meeting. Such default shall only be curable at the option of the City.

Upon such default, the City may immediately award the bid to the next lowest responsive and responsible bidder and recover from the original successful bidder the difference in cost between the original winning bid and the next lowest responsive and responsible bidder.

PERFORMANCE/PAYMENT BOND REQUIREMENTS:
The Contractor shall provide a Performance Bond and a Payment Bond, in the form prescribed in Section 3, Contract Documents, each in the amount of 100% of the Contract amount, the costs of which are to be paid by the Contractor. The bonds will be acceptable to the City only if the following minimum conditions are met:

a. is licensed to do business in the State of Florida;
b. holds a certificate of authority authorizing it to write surety bonds in this state;
c. has twice the minimum surplus and capital required by the Florida Insurance Code at the time the invitation to bid is issued;
d. is otherwise in compliance with the provisions of the Florida Insurance Code; and holds a currently valid certificate of authority issued by the United States Department of Treasury under 31 U.S.C. §§ 9304-9308.
e. The Surety Company must have a current rating of at least Excellent (A or A-) as reported in the most current Best Key Rating Guide, published by A.M. Best Company, Inc., of 75 Fulton Street, New York, New York 10038, with an underwriting limitation **of at least two times the dollar amount of the contract.**

If the Surety Company for any Bond furnished by the Contractor files for bankruptcy, has a receiver appointed, is declared bankrupt, becomes insolvent, has an assignment made for the benefit of creditors, has its right to do business terminated in the State of Florida, or ceases to meet the requirements imposed by the Contract Documents, the Contractor shall, within five (5) calendar days thereafter, substitute another Bond and Surety Company, both of which shall be subject to the City's approval.

By execution of these bonds, the Surety Company acknowledges that it has read the surety qualifications and surety obligations imposed by the Contract documents and hereby satisfies those conditions.

30. STATE REGISTRATION REQUIREMENTS: Any bidder required by Florida law to register to do business in this state shall either be registered or have applied for registration with the Florida Department of State in accordance with the provisions of Chapter 607, 608, 617, or 621, Florida Statutes, unless they are exempt. A copy of the registration/application may be required prior to award of a contract. Any partnership submitting a bid in response to this RFB shall have complied with the applicable provisions of Chapter 620, Florida Statutes.

31. NOTICE TO PROCEED/DELIVERY: After award of bid, a Notice to Proceed shall be issued bearing the terms of

delivery. Upon receipt of Notice to Proceed, successful bidder shall acknowledge receipt of same by either fax or mail and shall commence prosecution of the order so that the agreed upon delivery date will be satisfied.

32. PERFORMANCE EVALUATION: At the end of the Contract, the receiving department may evaluate the successful bidder's performance. This evaluation will become public record.

33. PURCHASING AGREEMENTS WITH OTHER GOVERNMENTAL AGENCIES: All bidders submitting a response to this RFB agree that such response also constitutes a bid in accordance with the terms of the RFB to all political subdivisions of Sarasota County and the State of Florida, under the same conditions, for the same prices as this bid, unless otherwise stipulated by the bidder.

34. NONEXCLUSIVE CONTRACT: Award of this Contract shall not require the City to use the Vendor for all work of this type, which may develop during the Contract term. This Contract is non-exclusive. The city reserves the right to concurrently Contract with other entities for similar work if it deems such action to be in the best interests of the City.

35. AUDIT: City shall have the right to audit vendor's records that relate to this Contract. Records shall be maintained for a period of three (3) years from the date of final payment.

36. UNAUTHORIZED ALIEN WORKERS: The City will not intentionally award publicly-funded contracts to any Contractor who knowingly employs unauthorized alien workers, constituting a violation of the employment provisions contained in U.S.C. Section 1324a(e) [Section 274A(e) of the Immigration and Nationality Act ("INA")]. The City shall consider employment by any Contractor of unauthorized aliens a violation of Section 274A(e) of the INA. Such violation by the Contractor of the employment provisions contained in Section 274A(e) of the INA shall be grounds for termination of this Agreement by the City.

37. E- VERIFY: The Contractor shall utilize the U.S. Department of Homeland Security's E-Verify system to verify the employment eligibility of all new employees hired by the Contractor during the term of the Contract and shall expressly require any subcontractors performing work or providing services pursuant to the Contract to likewise utilize the U.S. Department of Homeland Security's E-Verify system to verify the employment eligibility of all new employees hired by the subcontractor during the Contract term.

It is the awarded Bidder's responsibility to ensure that all its employees and subcontractors comply with the employment regulations required by the US Department of Homeland Security. The City shall have no responsibility to check or verify the legal immigration status of any employee of the awarded Bidder.

38. EMPLOYEE BACKGROUND CHECK: If an owner, except a stockholder in a publicly traded corporation, or an employee of the Contractor has been convicted of any offenses requiring registration as a sexual offender or sexual predator, regardless of the location of conviction, the Contractor shall ensure that the offender's or predator's work on the project is consistent with the terms of his probation and registry requirements.

39. PAYMENT: Two (2) original requests for payment must be submitted to the City of North Port on a form approved by the City. In lieu of the hard copies of the pay request submittal, scanned signed digital files of the requests for paymentsmay be submitted as an attachment to an e-mail. Each pay request must be accompanied by written consent of the surety, when applicable, and an updated work schedule to reflect progress of work. Payment shall be subject to the approval and direction of the surety in accordance with F.S. §255.05(11). Price shall be net and all invoices payable according to the Florida Local Government Prompt Payment Act (F.S. ch. 218). Upon certification and approval by the City or its dulyauthorized agent, progress payments may be made to the Contractor upon his/her application for all services or workcompleted or materials furnished in accordance with the Contract. Prior to fifty percent (50%) completion, the Contractor will be paid monthly the total value of the work completed and accepted during the

preceding month, less ten percent (10%) retainage. After fifty percent (50%) completion of the construction services purchased pursuantto the Contract, the City must reduce to five percent (5%) the amount of retainage withheld from each subsequent progress payment made to the Contractor upon request of the Contractor. For purposes of this subsection, the term "fifty percent (50%) completion" is the point at which the City has expended fifty percent (50%) of the total cost of the construction services purchased as identified in the Contract together with all costs associated with existing change ordersand other additions or modifications to the construction services provided for in the Contract. The City shall inform the Contractor's Surety of any reduction in retainage. The Contractor must update each new pay request in accordancewith any changes made to the previous submittal. The City or its duly authorized administrative agent, shall approve final payment for all work, materials and services furnished under this Contract.

Retainage may be reduced upon issuance of the Certificate of Substantial Completion by the City if, in the sole opinion of the City, sufficient progress on the schedule has been accomplished, the surety does not object, and the City has retainedadequate coverage for the project through the achievement of Final Completion.

40. MBE: Contractors awarded construction contracts who intend to subcontract material or service requirements of the project are encouraged to subcontract to certified minority business/women business enterprises firms or show good faith effort.

41. DBE Contract Assurance (IF APPLICABLE): The contractor, sub-recipient, or subcontractor shall not discriminate on the basis of race, color, national origin, or sex in the performance of this contract. The contractor shall carry out applicable requirements of 49 CFR Part 26 in the award and administration of DOT assisted contracts. Failure by the contractor to carry out these requirements is a material breach of this contract, which may result in the termination of this contract or such other remedy as the recipient deems appropriate.

42. SWORN STATEMENT, COMPLIANCE WITH FLORIDA TRENCH ACT: Bidder shall be solely responsible for complying with the Florida Trench Safety Act (553.60-553.64 Florida Statutes) and Occupational Safety and Health Administration excavation safety standards, 29 CFR 1926.650 (subpart P) as amended. All costs associated with complying with these requirements shall be included in the separate line items of the bid and shall be as detailed in the Sworn Statement of Compliance with the Florida Trench Safety Act. Bidder shall submit the Statement of Compliance with the FloridaTrench Safety Act form provided herein with his bid or with each work assignment.

43. INSURANCE REQUIREMENTS: The successful Bidder shall be required to supply, at their cost, insurance coverage in form and amount as required by the City, as outlined in the bid specifications.

44. CONTACT PROHIBITION: All prospective Bidders are hereby instructed **NOT** to contact any member of the City of North Port Commission, the City Manager, or City of North Port staff member other than the Authorized Contact Persons identified in this Solicitation regarding this solicitation package, Bidder's submittal package, City's Intent to Award, or City's Intent to Reject (if applicable) at any time prior to the FORMAL AWARD for this project. Any such contact shall be cause for rejection of your submittal.

45. SCRUTINIZED COMPANIES:

A. As required by section 287.135(5), Florida Statutes, for contracts of $1,000,000.00 or less, when submitting a bid or proposal, and prior to entering into a contract with the City, ever person or entity shall certify on a form provide by the City, that it is not on the Scrutinized Companies that Boycott Israel List, created pursuant to section 215.4725, Florida Statutes, and that it is not engaged in a boycott of Israel.

B. As required by section 287.135(5), Florida Statutes, for contracts of $1,000,000.00 or more, when submitting a bid or proposal, and prior to entering into a contract with the City, ever person or entity shall certify on a

form provided by the City, that all of the following are true:

1. It is not on the Scrutinized Companies that Boycott Israel List, created pursuant to section 215.4725, Florida Statutes, and that it is not engaged in a boycott of Israel; and

2. It is not on the Scrutinized Companies with Activities in Sudan list or the Scrutinized Companies with Activities in Iran Petroleum Energy Sector list, created pursuant to section 215.473, Florida Statutes; and

3. It is not engaged in business operations in Cuba or Syria.

C. PENALTY:

1. If a false certification is submitted or the person or entity has been placed on one of the above-noted Lists of Scrutinized Companies or has engaged in business operations in Cuba or Syria, the person or entity will be in breach of the Contract terms and the City may terminate the Contract.

2. A person or entity that has been found to have provided a false certification may be subject to a civil penalty equal to the greater of $2 million or twice the amount of the Contract, plus all reasonable attorney's fees and costs, including any costs for investigations that led to the finding of the false certification; and

3. A person or entity that has been found to have provided a false certification shall be ineligible to bid on any contract with the City for three (3) years after the date the City determined that a false certification has been submitted.

46. LOCAL PREFERENCE: Bidder may claim Local Preference if Bidder qualifies under the definition below and in accordance with Ordinance 2009-10, as may be amended by the City of North Port.

A. Local Business Definition:

Preference shall be given to a "local business or North Port local business" in the purchase of commodities and services procured pursuant to this Section. Bidders desiring to receive preference as a local business will be required to affirmatively state and provide documentation as set forth in the solicitation in support of their status as a local business. Any bidder who fails to submit sufficient documentation with their bid shall not be granted local preference consideration for the purpose of that specific contract award.

"Local business" means a bidder that maintains a physical business address located within the limits of Sarasota County, Charlotte County or Desoto County for a period of six (6) months or more before the bid submission date from which the bidder operates or performs business and where at least fifty percent (50%) of the bidder's employees are residents of the City. Post office boxes may not be used to establish a physical business address.

"North Port local business" means a local business that has its primary physical business address located within the limits of the City for a period of six (6) months or more before bid submission date, from which the bidder operates or performs business and where at least fifty percent (50%) of the bidder's employees are residents of the City. Post office boxes may not be used to establish a physical business address.

If requested by the City, the bidder will be required to provide documentation substantiating the information given in this affidavit. City reserves the right to request supporting documentation as evidence to substantiate the

information given in this affidavit. Failure to do so will result in the bidder's submission being deemed non-responsive.

Any bidder that misrepresents its status as a local business or North Port local business shall be barred from receiving any City contracts for a period of three (3) years.

B. Local Price Match Option:

Each formal competitive bid solicitation shall clearly identify the criteria for award. When a responsive and responsible bidder who is not a local business (hereafter, non-local business bidder) submits the lowest bid price (hereafter, low bid), all responsive and responsible local business and North Port local business bidders shall have five (5) business days to submit an offer to match the low bid, provided the original bid submitted by the local business bidder is within ten percent (10%) of the low bid if the amount of the low bid is no more than one million dollars ($1,000,000). If the amount of the low bid is more than one million dollars ($1,000,000) but no more than 2 million dollars ($2,000,000), local business and North Port local business bidders within five percent (5%) shall have the opportunity to match the low bid. If the amount of the low bid is more than two million dollars ($2,000,000) but no more than 3 million dollars ($3,000,000), local business and North Port local business bidders within three percent (3%) shall have the opportunity to match the low bid. If the amount of the low bid is more than three million dollars ($3,000,000), local business and North Port local business bidders within two and one-half percent (2.5%) shall have the opportunity to match the low bid. The original lowest responsive and responsible North Port local business bidder who matches the low bid shall receive the award. If no eligible North Port local business bidder can match the low bid, the award shall be made to the original lowest responsive and responsible local business bidder who matches the low bid. If no eligible local business bidder can match the low bid, the award shall be made to the lowest responsive and responsible bidder, regardless of local business status.

If there is a tie between a local business and a non-local business, the local business shall receive the award. If there is a tie between two North Port local businesses or two local businesses, the business with the higher percentage of employees who reside within the City shall receive the award.

47. CONFLICTS OF INTEREST – CITY OFFICERS, EMPLOYEES OR BOARD MEMBERS: The Florida Code of Ethics regulates the ability of the City to contract with its public officers (including board members), employees, and their immediate relatives. Respondents shall disclose any such potential conflicts on the provided Conflict of Interest Form. Respondents are responsible for reviewing Florida Statute §112.313 to determine whether they may have a conflict. If Respondent is in doubt as to their ability to contract with the City, they shall seek a conflict of interest opinion from the City Manager or his/her designated representative prior to submittal of a response.

END OF SECTION I

SECTION II. GENERAL PROVISIONS

1. SCOPE OF WORK

1.1 ***Intent of Contract:*** Bid forms shall set forth firm bid unit prices for furnishing all necessary materials and completing all work, including but not limited to labor, transportation, supervision, electricity, water, equipment, startup, testing, training and all other work needed for a complete and operational system, as described in the Technical Specifications and/or shown on the Contract Drawings attached herewith. The City reserves the right to establish the exact limits of work in the field and to add or delete from the Project, as it deems necessary.

The intent of the Technical Specifications and Contract Drawings, as applicable, is to describe a complete project to be constructed in accordance with the Contract Documents. The Contract Documents comprise the entire Agreement between the City and the Contractor. They may be altered only by addendum or change order approved by the City.

1.2 ***Definitions:***

1.2.1 The successful bidder for this Contract will be referred to as the **CONTRACTOR;** Department Director or his/her representative, acting personally or through an assistant duly authorized for such act by the City will be referred to as City. For the purposes of this Contract, the word "Project" shall mean the services limits of **CONTRACTOR**.

1.2.2 The Contract documents consist of the Request for Bids, Instructions to Bidders, Bid Forms, Technical Specifications, Construction Drawings, General Provisions, Special Provisions, Insurance Requirements, and all other related documents, including all modifications thereof incorporated in the documents before their execution. These form the Contract.

1.2.3 Written notice shall be deemed to have been duly served three days after date of postmark, and upon receipt, if delivered to the individual or member of the firm or an officer of the corporation for whom it is intended.

1.2.4 Subcontractor(s), as employed herein, includes only those having a direct Contract with the Contractor and it includes one who furnishes material worked to a special design according to the plans and specifications of this work, but does not include one who merely furnishes material not so worked.

1.2.5 The term "work" of the Contractor includes labor or materials or both, equipment, transportation, or other facilities necessary to complete the Contract.

1.2.6 All time limits stated in the Contract documents are of essence to the Contract.

1.2.7 The words "furnish," furnish and install," "install," and "provide" or words with similar meaning shall be interpreted, unless otherwise specifically stated, to mean "furnish and install complete in place and ready for service."

1.3 ***Time of Completion:*** The Contractor shall complete the work within the time set forth in the Contract. The Contractor shall complete each portion of the work within such time as set forth in the Contract for such portion. The time of completion of the Contract shall be expressed in calendar days.

All work for this project shall be performed during regular business hours. A regular workday shall be considered to be a maximum of ten (10) hours duration. The cost for inspection time for work performed on weekends, holidays, or in excess of ten (10) hours may be billed to the Contractor at the prevailing wage plus overhead costs for those persons involved.

A working day is any day within the period between the start of the Contract time and the date provided in the Contract for completion or upon field acceptance by the City of all work provided for in the Contract, or as stipulated in the Technical Specifications, or whichever comes first, other than: Saturday, Sunday, any day designated as a holiday by the City, any day the Contractor is prevented from working during the first five (5) hours of the work day, with at least sixty percent (60%) of the normal work force, due to inclement weather.

Request for planned overtime by the Contractor must be submitted in writing to the City, forty-eight (48) hours in advance, and may not proceed without the City's approval.

1.4. Quality of Work: The Contractor agrees to do the work covered under this Contract to the best of his/her ability and conforming to this Contract and specifications and of a quality acceptable to the trades. The Contractor further agrees to follow proper and appropriate instructions by the City.

2. PROSECUTION AND PROGRESS

2.1 ***Subletting or Assigning of Contracts:*** The Contractor shall not sublet, sell, transfer, assign, or otherwise dispose of the Contract or any portion thereof, or his right, title, or interest therein, without written consent of the City.

1.1. Preconstruction Meeting: After the Contract has been awarded, the City will schedule a preconstruction meeting to be held before any work is begun to review the construction aspects of the Project. The meeting will be between the City, the Contractor and various utility companies that will be affected by the construction.

2.2 ***Performance and Payment Bond:*** The awarded Contractor shall furnish a certified recorded copy from Sarasota County Clerk's Office of the Performance and Payment Bond in the amount of 100% of the total project price within ten (10) calendar days after notification of award to the Purchasing Department. The undersigned shall be responsible and bear all costs associated to record Performance and Payment Bond with Sarasota County Clerk's Office. Receipt of said recording and a certified copy of the Bond shall be furnished to the Purchasing Department at the time of the pre-construction meeting.

2.3 ***Submission of Work Schedule/Order of Completion:*** At the preconstruction meeting, the successful bidder shall have on hand a working schedule for the Project, showing in detail the order in which the Contractor proposes to perform the work. He/she shall indicate the dates on which major equipment will be delivered and various major items of work will start and the estimated completion dates of the major items. Construction Schedule provides additional information for ongoing scheduling requirements associated with this Contract.

2.4 ***Submission of Schedule of Values:*** A Schedule of Values to reflect value of equipment, materials and work performed per unit price, with totals shall be submitted at preconstruction meeting. Both parties are to agree on proposed schedule of values prior to any work being performed.

2.5 ***Provisions for Convenience of Public:*** The Contractor shall schedule his/her operations so as minimize any inconvenience to adjacent businesses for residences. Where necessary, the City may require the Contractor to

construct first the work in any areas along the Project where restrictions caused by construction operations would represent a more serious handicap, before beginning construction in the less affected areas.

3. CONTROL OF THE WORK AND MATERIALS

3.1 *Control of Work:*

3.1.1 ***Plans and Contract Documents:*** If required for the project, the Contractor will be furnished a universal serial bus flash drive and four (4) signed and sealed building permit 11"x17" copies of the Plans, Technical Specifications, General and Special Provisions. Additional signed & sealed copies, if needed to obtain permits for the Work associated with this Contract, will be submitted upon written request. Other copies that may be needed by the Contractor shall be produced by the Contractor at his own expense; or, the Contractor may request additional full-size hardcopy of the plans for a cost of $50.00 for each set of plans. Check shall be written out to North Port Utilities (NPU) and brought to Utilities' Field Office in exchange for plans.

3.1.2 ***Detail Drawings and Instructions:*** The City may furnish, with reasonable promptness, additional instructions by means of drawings or otherwise, necessary for the proper execution of the work. All such drawings and instructions shall be consistent with the Contract documents, true developments thereof, and reasonably inferable there from.

3.1.3 ***Order of Precedence:*** These documents are integral parts of the Contract, and a requirement occurring on one is as binding as though occurring in all. They are intended to be complementary and to describe and provide for a complete work. In cases of discrepancy, the governing order of documents shall be as follows:

3.1.3.1 Permits from Agencies as required by law
3.1.3.2 Change Orders
3.1.3.3 Contract Documents, General Provisions and Special Provisions in that order
3.1.3.4 Technical Specifications
3.1.3.5 Construction Plans
- **3.1.3.5.1** Dimensions given in figures govern scaled dimensions.
- **3.1.3.5.2** Detail drawings govern over general drawings.
- **3.1.3.5.3** Addenda/Change order drawings govern over Contract documents.

3.1.3.6 FDOT Roadway and Traffic Design Standards, January, latest edition (if applicable).
3.1.3.7 FDOT Standard Specifications, for Road & Bridge Construction, latest edition (if applicable).
3.1.3.8 North Port Utilities Standard Details and Specifications

3.1.4 ***Conformity of Work with Plans:*** All work performed and all materials furnished shall be in reasonably close conformity with lines, grades, cross sections, dimensions, and material requirements, including tolerances, shown on the Plans or indicated in the Technical Specifications or Special Provisions.

3.1.5 ***Authority of the City:*** All work shall be done under the supervision of the City or the City's representative and performed to its satisfaction. It is agreed by the parties hereto that the City shall decide all questions and disputes which may arise relative to the interpretation of the plans, construction, prosecution, and fulfillment of the Contract, and as to the character, quality, amount, and value of any work done, and material furnished, under or by reason of the Contract.

3.1.6 ***City's Status:*** The City and/or the City's Representative shall examine and inspect the work to assure compliance with the requirements of these Contract Documents. The City and/or the City's Representative

shall determine the quality and acceptability of materials and workmanship relative to the requirements of the Plans and Technical Specifications.

The City has the authority to:

3.1.6.1 Stop the work whenever such stoppage may be necessary to insure the proper execution of the Contract.

3.1.6.2 Reject all work that does not conform to the Contract.

3.1.6.3 Resolve questions that arise in the execution of the work.

The City's Representative has the authority to:

3.1.6.4 Reject all work that does not conform to the Contract.

3.1.6.5 Resolve questions that arise in the execution of the work.

3.1.7 ***Suspension of Work:*** The City may at any time suspend work by giving ten (10) calendar days notice to the Contractor in writing. The City shall reimburse the Contractor for expenses incurred by the Contractor in connection with work under the Contract as a result of such suspension, unless such suspension was caused by actions of the Contractor. However, if the work or any part thereof shall be stopped by a notice in writing aforesaid, and if the City does not give written notice to the Contractor to resume work within thirty (30) calendar days of the date fixed in the written notice to suspend, then the Contractor will be entitled to the estimates and payment for all work done, unless such suspension was caused by actions of the Contractor.

3.1.8 ***The City's Right to do Work:*** If the Contractor should neglect to prosecute the work properly or fail to perform in accordance with the provisions of this Contract, the City, after three days written notice, may without prejudice to any other remedy it may have, make good any deficiencies and deduct from the payment due the Contractor.

3.1.9 ***The City's Right to Terminate Contract:*** If the Contractor refuses or fails to complete the work within the time specified for this Contract, or any extension thereof, the City may terminate the Contractor's right to proceed. In such event, the City may take over the work and prosecute the same to completion by the Contract or otherwise and the Contractor will be liable for any excess cost occasioned by the City. The City may take possession of and utilize in completing the work such materials and equipment as may be on the site of the work and necessary therefore.

If the Contractor should be adjudged bankrupt, or should make a general assignment for the benefit of his/her creditors, or if a receiver should be appointed due to insolvency, or if he/she should refuse or fail, except in cases which a time extension is provided to supply enough workmen, or if he/she should fail to make payment to subcontractors for labor and/or material, or disregard laws, ordinances or the instructions of the City, or be guilty of a violation of a provision of the Contract, then the City may, without prejudice to any other right or remedy and after giving seven (7) calendar days' notice, terminate employment of the Contractor and possess materials, tools, and appliances thereon and finish work by methods it may deem expedient. Expenses incurred by the City and the damage incurred through the Contractor's default shall be borne by the Contractor.

In any circumstance, the City shall have the right to unilaterally cancel, terminate or suspend this Contract, in whole or in part, by providing the Contractor thirty (30) calendar days written notice by certified mail.

In the event of termination, the Contractor shall be entitled to compensation for services rendered and costs incurred through the effective date of termination. All finished or unfinished documents, material, or work

shall become the property of the City and shall be delivered to the City without reservation.

3.1.10 ***City May Stop the Work:*** If the Work is defective, or the Contractor fails to supply sufficient skilled supervisory personnel or workmen or suitable materials or equipment or the work area is deemed unsafe, the City may order the Contractor to stop the Work, or any portion thereof, until the cause for such order has been eliminated; however, this right of the City to stop the Work shall not give rise to any duty on the part of the City to exercise this right for the benefit of the Contractor or any other party. The City will not award any increase in Contract Price or Contract Time if the Work is stopped due to the circumstances described herein.

3.1.11 ***City's Decision:*** The City shall, within a reasonable time after their presentation, make decisions in writing on claims by the Contractor and on all other matters relating to the execution and progress of the work or the interpretation of the Contract Documents.

3.1.12 ***Authority and Duties of City's Inspectors:*** The City's Inspectors shall be authorized to inspect all work done and all materials furnished. They shall be authorized to call to the attention of the Contractor any failure of the work or materials to conform to the Technical Specifications and Contract. The presence of the Inspector shall in no way lessen the responsibility of the Contractor.

3.1.13 ***Inspection of Work:*** The City and its representative shall at all times have access to the work wherever it is in preparation or progress and the Contractor shall provide proper facilities for such access and inspection. If the Specifications/Conditions, the City's instruction, laws, ordinances or any public authority require any work to be specially tested or approved, the Contractor shall give to the City timely notice of its readiness for inspection and, if the inspection is by an authority other than the City, the date fixed for such inspection. Inspections by the City shall be promptly made and, where practicable, at the source of supply. If any work should be covered up without approval or consent of the City, it must, if required by the City, be uncovered for examination at the Contractor's expense. Re-examination of questioned work may be ordered and the work must be uncovered by the Contractor.

3.1.14 ***Contractor's Supervision and Employees:*** The Contractor shall supervise, inspect, and direct the work completely and efficiently, devoting such attention thereto and applying such skills and expertise as may be necessary to perform the work in accordance with the Contract Documents. The Contractor shall be solely responsible for the means, methods, techniques, sequence and procedures necessary for the orderly progress of the work, and to maintain all safety precautions and programs incidental thereto. The Contractor shall at all times enforce strict discipline and good order among his/her employees and shall not employ any unfit person or anyone unskilled in the work assigned to him/her. The Contractor shall be responsible to see that the completed work complies fully with the Contract Documents.

The Contractor will employ and maintain on the Work a qualified supervisor or superintendent who shall have been designated in writing by the Contractor as the Contractor's representative at the site. The supervisor shall have full authority to act on behalf of the Contractor and all communications given to the supervisor shall be as binding as if given to the Contractor.

As the work progresses, the Contractor shall keep on the job at all times an English-speaking Supervisor, Superintendent or designee, technically qualified, who is an employee of the Contractor and who shall not be replaced without written notice and approval of the City. The Superintendent or his/her qualified designee shall be present at the job site and direct the work of subcontractors, as well as employees of the Contractor. This supervisor will be equipped with a communication device enabling him/her to contact suppliers, subcontractors or his/her office who in turn can convey necessary communications to others. The

Contractor shall issue all communications to the City or his/her representative.

The Contractor's Superintendent shall be present on the job site **at all times** while work is in progress and shall be available by phone for emergencies twenty-four hours per day, seven days per week. Failure to observe this requirement shall be considered suspension of the work by the Contractor until such time as such Superintendent is again present on the job.

If the Contractor, in the course of the work, finds any discrepancy between the drawing and the physical conditions of the site, or any errors or omissions in drawing, or in the construction layout points and instructions, he/she shall immediately inform the City, in writing, and the City shall promptly verify same. Any work done after such discovery will be done at the Contractor's risk.

Neither party shall employ or hire any employee of the other party without the concurrence of each party.

3.1.15 ***Contractor's Understanding:*** It is understood and agreed that the Contractor has, by careful examination, satisfied himself/herself as to the nature and locations of the work, the conformation of the ground, the character, quality, and quantity of materials to be encountered, the character of equipment and facilities needed prior to and during prosecution of the work under this Contract. No verbal agreement or conversation with any officer, agent, or employee of the City, either before or after execution of this Contract, shall affect or modify the terms or obligations herein contained.

3.1.16 ***Permits and Regulations:*** Permits and licenses necessary for the prosecution of the work shall be secured by the Contractor and paid for by the City, unless otherwise specified. The Contractor shall give all notices and comply with all laws, ordinances, rules, and regulations bearing on the conduct of the work as drawn and specified. If the Contractor observes that the specifications and drawings are at variance therewith, he shall promptly notify the City in writing, and any necessary changes shall be adjusted as provided in the Contract for changes in the work. If the Contractor performs any work knowing it to be contrary to such laws, ordinances, rules, and regulations, and without such notice to the City, he/she shall bear all costs arising there from.

3.1.17 ***Protection of Work and Property:*** The Contractor shall continuously maintain protection of all his/her work from damage and shall protect the City's property from injury or loss arising in connection with this Contract. He/she shall adequately protect adjacent property as provided by law and the Contract Documents. He/she shall provide and maintain all passageways, guard fences, lights, and other facilities for protection required by public authority or local conditions. In an emergency affecting the safety of life or of the work, or of adjoining property, the Contractor, without special instruction or authorization from the City, is hereby permitted to act, at his discretion, to prevent such threatened loss or injury, and he/she shall so act, without appeal, if so instructed or authorized. Any compensation claimed by the Contractor on account of emergency work shall be determined by agreement between the Contractor and the City.

The Contractor shall not occupy private land outside of any easements or rights of way unless a written authorization has been signed by the property owner. It shall be the Contractor's responsibility to obtain and provide these agreements prior to construction, if required. Prior to the use of private lands, the Contractor shall submit a copy of the agreement(s) to the City. In the event the Contractor uses private property for any purpose without first having obtained the necessary approvals from the property owner and provided the necessary agreements to the City, the City will direct the Contractor in writing to immediately cease using such property.

Prior to application for final payment, the Contractor shall provide documentation from the owner of each piece of private property for which an agreement for use was provided, or for which the City has issued written notification to the Contractor, that each owner is satisfied with the manner in which the Contractor has restored the property. Final payment or reduction in retainage shall not be paid until such documentation is received by the City.

3.1.18 ***Changes in the Work:*** The City, without invalidating the Contract, may order extra work or make changes by altering, adding to or deducting from the work, the Contract sum being adjusted accordingly. Such work shall be executed under the conditions of the original Contract. The change and amount of compensation must be agreed upon in writing in a document of equal dignity herewith prior to any deviation from the terms of this Contract.

In giving instructions, the City shall have authority to make minor changes in the work, not involving extra cost, and not inconsistent with the purposes of the work. Except in an emergency endangering life or property, no extra work or change shall be made unless in pursuance of a written order by the City; and no claim for an addition to the Contract sum shall be valid, unless ordered. Value of any such extra work or change shall be determined in one or more of the following ways:

3.1.18.1 By estimate and acceptance in a lump sum.
3.1.18.2 By unit prices named in the Contract or subsequently agreed upon.
3.1.18.3 By cost and percentage or by cost and a fixed fee.

If none of the previous methods are agreed upon, the Contractor, provided he/she receives an order as above, shall proceed with the work. In such case and also under case, he/she shall keep amendment in such form as the City may direct, a correct amount of the net cost of labor and materials, together with vouchers. The City shall certify to the amount, including reasonable allowance for overhead and profit, due to the Contractor. Pending final determination of value, no payment on changes shall be made. When requiring a change in the scope of services the Contractor shall notify the City by written notice that a change order is requested within five (5) days of any occurrence.

3.1.19 ***Deductions for Uncorrected Work:*** If the City deems it inexpedient to correct work injured or done not in accordance with the Contract, some equitable deductions from the Contract price shall be made thereof.

3.1.20 ***Delays and Extension of Time:*** If the Contractor should be delayed at any time in the progress of work by any act of negligence by the City or its employees or by any other Contractor employed by the City, or by changes ordered in the work, or by such causes beyond the Contractor's control, or by delay authorized by the City, or by any cause which the City shall decide to justify the delay, then the time of completion shall be extended for such reasonable time as the City may decide. However, no time delay shall be allowed if judged by the City to be caused by the Contractor's negligence.

No such extension shall be made for delay occurring more than seven (7) calendar days before claim therefore is made in writing to the City. In the case of a continuing cause of delay only one (1) claim is necessary. This article does not exclude the recovery of damages for delay by either party under other provisions in the Contract Documents.

3.1.21 ***Correction of Work Before Final Payment:*** All work, materials, whether incorporated in the work

or not, all processes of manufacturer, and all methods of construction shall be at all times and places subject to the inspection of the City who shall be the final judge of quality and suitability of the work, materials, processes of manufacture, and methods of construction for the purposes for which they are used. Should they fail to meet City's approval; they shall be forthwith reconstructed, made good, replaced, and/or corrected, as the case may be, by the Contractor at his/her own expense. Rejected material shall be immediately removed from the site. If, in the opinion of the City, any portion of the work injured or not performed in accordance with the Contract Documents, the compensation to be paid to the Contractor hereunder shall be reduced by such amount as the City, in its judgement, finds to be equitable.

3.1.22 ***Contractor Right to Stop Work or Cancel Contract:*** If the work should be stopped under an order of any court or other public authority for a period of three (3) months through no act or fault of the Contractor or of anyone employed by him, or if the City fails to pay the Contractor within thirty (30) calendar days of maturity and presentation of any sum certified by the City, then the Contractor may, upon seven (7) calendar days written notice to the City, stop work and terminate this Contract.

3.1.23 ***Removal of Equipment:*** In the case of annulment of this Contract before completion from any cause whatever, the Contractor, if notified to do so by the City, shall promptly remove any part or all of his equipment and supplies from property of the City and/or site of work, failing which the City has the right to remove such equipment and supplies at the Contractor's expense.

3.1.24 ***Use of Completed Portions:*** The City has the right to take possession of and use any completed or partially completed portions of the work, notwithstanding the time for completing the entire work of such portions may not have expired, but taking possession and use shall not be deemed an acceptance of any work not completed in accordance with the Contract Documents. If such prior use increases the cost of or delays the work, the Contractor shall be compensated as the City may determine and the City approves.

3.1.25 ***Payments Withheld:*** The City may withhold payment to the Contractor from loss on account of:

- **3.1.25.1** Defective Work not remedied.
- **3.1.25.2** Claims filed or evidence indicating probable filing of claims.
- **3.1.25.3** Failure of the Contractor to make payment properly to Subcontractors or for material/labor.
- **3.1.25.4** A reasonable doubt that the Contract can be completed for the balance then unpaid.
- **3.1.25.5** Damage to another Contractor.

3.1.26 ***Damages:*** Any claim for damage arising under this Contract shall be made in writing to the party liable within a reasonable time of the first observance of such damage and not later than the time of final payment, except as expressly stipulated otherwise in the case of faulty work, and shall be adjusted by agreement.

3.1.27 ***Assignment:*** Neither party to the Contract shall assign the Contract or sublet it as a whole without the written consent of the other, nor shall the Contractor assign any monies due or to become due to him/her hereunder without the previous written consent of the City.

3.1.28 ***Right of Various Interests:*** Before work being done by the City's forces or by other Contractor's forces, contiguous to work covered by this Contract, the respective rights of the various interests involved shall be established by the City before such commencement, to secure the completion of the various portions

of the work in general harmony.

3.1.29 ***Separate Contracts:*** The City reserves the right to let other Contracts in connection with this work. The Contractor shall afford other Contractors reasonable opportunity for the introduction and storage of their materials and execution of the work and shall properly connect and coordinate his/her work with theirs. If any part of the Contractor's work depends on proper execution or results upon the work of any other Contractor, the Contractor shall inspect and promptly report to the City any defects in such work that render it unsuitable for such proper execution and results. His/her failure to so inspect and report shall constitute an acceptance of the other Contractors work as fit and proper for the reception of his work, except as to defects, which may develop on the other Contractor's, work after execution of his work.

3.1.30 ***Subcontractors:*** The Contractor shall provide a list of Subcontractors with his/her proposal for approval. The Contractor shall be fully responsible for all acts and omissions of his Subcontractors and of persons and organizations directly or indirectly employed by them and of persons and organizations for whose acts any of them may be liable to the same extent that he is responsible for the acts and omissions of persons directly employed by him. Nothing in the Contract Documents shall create any contractual relationship between City or City's Engineer of Record and any Subcontractor or other person or organization having a direct contract with Contractor, nor shall it create any obligation on the part of City or City's Engineer of Record to pay or to see to the payment of any moneys due any Subcontractor or other person or organization, except as may otherwise be required by law. City or City's Engineer of Record may furnish to any Subcontractor or other person or organization, to the extent practicable, evidence of amounts paid to Contractor on account of specific Work done in accordance with the schedule of values.

Substitutions must be submitted in writing and shall be subject to the approval by the City. To insure proper execution of his/her subsequent work, the Contractor shall measure work already in place and shall at once report to the City any discrepancy between the executed work and the drawings.

Acceptance of any such Subcontractor, person or organization shall not constitute a waiver of any right of the City, City's Representative, or Engineer to reject defective Work, material or equipment; or, Work, material or equipment not in conformance with the requirements of the Contract Documents.

The divisions and sections of the Specifications and the identifications of any Drawings shall not control the Contractor in dividing the Work among Subcontractors or delineating the Work to be performed by any specific trade.

The Contractor agrees to bind specifically every Subcontractor to the applicable terms and conditions of the Contract Documents for the benefit of the City.

All Work performed for the Contractor by a Subcontractor shall be pursuant to an appropriate agreement between the Contractor and the Subcontractor.

The Contractor shall be responsible for the coordination of the trades, Subcontractors and materialmen engaged upon his Work.

- The Contractor shall cause appropriate provisions to be inserted in all subcontracts relative to the Work to bind Subcontractors to the Contractor by the terms of these General Conditions and other Contract Documents insofar as applicable to the Work of Subcontractors, and to give the Contractor the same power in regard to terminating any subcontract that the City may exercise over the Contractor under any provisions of the Contract Documents.

- The City, City's Representative, or Engineer will not undertake to settle any differences between the Contractor and his Subcontractors or between Subcontractors.
- If in the opinion of the City, City's Representative, or Engineer, any Subcontractor on the Project proves to be incompetent or otherwise unsatisfactory, he shall be replaced if and when directed in writing.

3.1.31 ***Horizontal and Vertical Control:*** Unless noted otherwise in the Contract documents, the Contractor shall be responsible for the layout of all Contract work. The Contractor shall employ or retain any/all professional services that are required by the Contract to complete the work. The Contractor shall carefully preserve benchmarks, reference points and stakes, and, in case of willful or careless destruction, be responsible for any mistakes that may be caused by their unnecessary loss or disturbance.

3.1.32 ***Lands for Work:*** The City shall provide the lands upon which the work under this Contract is to be done, except that the Contractors shall provide land required for the erection of temporary construction facilities and storage of material, together with the right of access to same.

3.1.33 ***Cleaning Up:*** The Contractor shall, at such times as may be required by the City, remove from the City's property and from all public and private property, at his/her own expense, all temporary structures, used materials and equipment, rubbish and waste materials resulting from his/her operations. All damaged areas will be restored by the Contractor to their original conditions and approved by the City. By submission of a bid, the Contractor assumes full responsibility for the associated expenses. There shall not be an increase in time or price associated with such removal, and payment to Contractor may be withheld until such work is completed.

3.1.34 ***Guarantee:*** The Contractor shall warrant all equipment furnished and work performed by him/her for a period of one (1) year from the date of written acceptance of the work, final completion by the City or as may be otherwise specified. Any faulty work or equipment will be fully corrected at no cost to the City and restored work will be warranted for one year from the date of acceptance, or as may be otherwise specified. This will not release additional warranties required by other sections or provided by individual suppliers.

The making and acceptance of final payment shall not waive any claim for faulty work appearing after final payment or for failure to adhere strictly to the Contract documents. If any part of the project is guaranteed for a longer period, such longer period shall prevail. Except as otherwise specified, all work shall be guaranteed by the Contractor against defects resulting from use of inferior materials, equipment or workmanship for one (1) year from the date of completion or written acceptance by the City, whichever is later.

3.1.35 ***Responsibility Regarding Existing Utilities and Structures:*** The existence and location of underground utilities indicated on the plans are not guaranteed and shall be investigated and verified in the field by the Contractor before submitting a bid. Excavation in the vicinity of existing structures and utilities shall be done by hand. The Contractor shall be responsible for any damage to, and for maintenance and protection of, existing utilities and structures from any damage resulting from said excavation. The Contractor is to include within his line item bid prices the costs to protect, support, relocate, or move (whether shown or not shown on the proposed project set of plans) all underground utilities, which may be in conflict with the construction of the proposed project.

3.1.36 ***Accidents:*** The Contractor shall provide equipment and medical facilities as necessary to supply

first aid to anyone who is injured in connection with the work. The Contractor must promptly report in writing to the City accidents arising out of, or in conjunction with the performance of the work, whether in, or adjacent to, the site, which causes death, personal injury, or property damages, giving full details and statements of witnesses. If death or serious injuries or serious damages are caused, the accident shall be reported immediately by telephone or messenger to the City. If a claim is made by anyone against the Contractor or Subcontractor on account of an accident, the Contractor shall promptly report the facts in writing to the City, giving full details of the claim.

3.1.37 ***Stage Plans:*** Stage plans of structural alterations, cofferdams, dredging, furnished or approved by the City, shall be adhered to unless objected to in writing by the Contractor, but the submission or approval of stage plans by the City shall not relieve the Contractor of full responsibility for the work.

3.1.38 ***Measurement of Quantities:*** The quantities of work performed will be computed by the City on the basis of measurement taken by the City or its assistants, and these measurements shall be final and binding. All work computed under the Contract shall be measured by the City according to the United States Standard Measurement and Weights. The City does not assume any responsibility that the final quantities will remain in accord with estimated quantities, nor shall the Contractor claim misunderstanding or deception because of such estimate of quantities.

The estimated quantities of work to be done and material to be provided may be increased, decreased, or omitted, as provided herein. Any increase in quantities shall be approved by the City prior to any work.

3.1.39 ***Reference to Other Specifications:*** Where reference is made to specifications such as ASTM, AWWA or AASHTO, the latest edition shall be used.

3.1.40 ***Sanitary Facilities:*** The Contractor shall provide and maintain, in a sanitary condition, facilities for his/her employees as are required by local and state boards of health.

3.1.41 ***Quality of Equipment and Materials:*** To establish standards of quality, the City may, in the specifications, refer to products by name and/or catalog number. This procedure is not to be construed as eliminating from competition other products of equal quality by other manufacturers where fully suitable in design.

3.1.41.1 The Contractor shall furnish a complete list of proposed desired substitutions prior to signing of the Contract together with such engineering and catalog data as the City may require.

3.1.41.2 The Contractor shall abide by the City's judgment when proposed substitute items of equipment are judged unacceptable and shall furnish the specified item of equipment in such case. All proposals for substitutions shall be submitted in writing by the General Contractor. The City will approve or disapprove proposed substitutions in writing within a reasonable time.

3.1.42 ***Codes and Laws:*** The successful bidder shall comply with all Federal, State, Local Laws and Ordinances that affect the Contract in any way.

3.1.43 ***Traffic Control:*** The Contractor shall comply with the National Committee on Uniform Traffic Control and Devices (NCUTCD) standards established by the Federal Highway Commission and the 2016 (or most current) FDOT Standards for Traffic Control Through Work Zones and maintain safe conditions at all times.

3.1.44 ***Exploration and Reports:*** If reference is made to identification of reports of explorations and tests of subsurface, or other project specific, conditions at the site that have been used in preparing the Contract documents, it should be understood that these reports are not part of the Contract documents. The Contractor shall have full responsibility with respect to subsurface, or other project specific, conditions at the site. Technical data, made available only at the Contractor's request, may not be sufficient for construction purposes. Additional investigations may be necessary for the purposes of carrying out the construction project. If the Contractor desires additional subsurface, or other applicable project specific, investigation, it will be done at his/her expense, prior to bidding. Limited Subsurface, or other project specific, reports for this project are available through NPU.

If the Contractor has elected not to make subsurface, or other project specific, investigation prior to bidding, he/she shall not be entitled to any extra compensation or Contract change orders due to conditions encountered.

3.1.45 ***Existing Structures:*** Drawing of physical conditions in or relating to existing surface and subsurface structures which are at or contiguous to the site that have been utilized by the consultant and/or the City in preparation of the Contract documents. The Contractor may rely upon the accuracy of the technical data contained in such drawing but not for the completeness thereof for the purpose of preparing or submitting a bid. Except as previously indicated, the Contractor shall have full responsibility with respect to physical conditions in or relating to such structures.

3.1.46 ***Report of Differing Conditions:*** If the Contractor believes that any technical data on which he/she relies is inaccurate, or if any physical conditions uncovered or revealed at the site differ materially from that indicated, reflected, or referred to in the Contract documents, the Contractor shall promptly, after becoming aware and before performing any work in connection therewith (except in emergency situations), notify the City in writing about the inaccuracy of difference. The City will promptly review the pertinent conditions, determine the necessity of obtaining additional explorations or tests with respect thereto and advise the City in writing (with a copy to the Contractor) of the City's findings and conclusion. Contractor's cost of, or the time required for, performance of any part of the work under this contract, whether or not changed as a result of such conditions, an equitable adjustment shall be made and the contract modified in writing accordingly.

No claim of the Contractor under this clause shall be allowed unless the Contractor has given the notice required; provided, however, the time prescribed therefore may be extended by the City.

No claim by the Contractor for an equitable adjustment hereunder shall be allowed if asserted after final payment under this Contract.

3.1.47 ***Not Shown or Indicated:*** If an underground facility is uncovered or revealed at or contiguous to the site, which was not shown or indicated and of which the Contractor could not reasonably have been expected to be aware, the Contractor shall promptly, before performing any work (except in emergencies), identify the owner of such underground facility and give written notice thereof to that owner and to the City. The *Contractor* will review the underground facility to determine the extent to which the documents should be modified to reflect and substantiate the consequences of the existence of the underground facility. With City approval, the Contract documents will be amended or supplemented to the extent necessary. During such time, the Contractor shall be responsible for the safety and protection of such underground facility. The Contractor shall be allowed an increase or an extension of time, or both, to the extent that they are attributable.

3.1.48 ***Progress Meeting:*** Progress meetings will be conducted bi-weekly or as required if requested by Contractor or the City.

3.2 Storage of Materials

3.2.1 Contractor shall, at its expense, receive, unload, store in a secure place, and deliver from storage to the construction site all materials and equipment required for the performance of the Contract.

3.2.2 Contractor is not entitled to payment for same except for those materials which in City's discretion are properly stored and are going to be installed or incorporated into the construction of the Project within thirty (30) days of delivery to the construction site.

3.2.3 The storage facilities and methods of storing shall meet City's approval and shall be in accordance with manufacturer's recommendations, or City will not be obligated to pay for same.

3.2.4 Materials and equipment subject to degradation by outside exposure shall be stored in a weather tight enclosure provided by Contractor at its expense.

3.2.5 City may at its discretion require material to be stored in an air-conditioned location.

3.2.6 Provided the above conditions are met, the stored materials may be included in a subsequent Application for Payment if the Contractor also complies with the following:

3.2.6.1 An applicable purchase order is provided listing the materials in detail and identifying the Contract Documents, by name, with verification that the total value of the purchase order amount reconciles with the corresponding application for payment stored materials line item value.

3.2.6.2 Evidence that proper storage security is provided.

3.2.6.3 The City is provided legal title (free of liens or encumbrances of any kind) to the material that is stored or stockpiled.

3.2.6.4 The Contractor and/or its Subcontractor have provided insurance for the Stored Materials against loss, damage (from whatever source), or disappearance, including loss or theft prior to incorporation into the Work. By execution of the Contract, Contractor releases City from any responsibility for Stored Materials and assumes all liability for and risk of loss or damage, by whatever means, including City's alleged negligence, regardless of whether the City has paid for said Stored Materials.

3.2.7 Once any Stored Material is paid for by City, it shall not be removed from the designated storage area except for incorporation into the Work or upon subsequent written approval by City.

3.2.8 No Applications for Payment shall be submitted nor payments made based on the value of materials stored at locations other than the Project, unless otherwise approved in writing by the City.

3.2.9 It is further agreed between the parties that the transfer of title and the City's payment for any Stored Material pursuant to the Contract Documents shall in no way relieve the Contractor of the responsibility for providing and installing such material in accordance with the requirements of the Contract Documents.

3.2.10 The Contractor warrants that title to all of the Work or Stored Materials covered by the Application for Payment will pass to the City either by incorporation in the Project or upon receipt of payment by the Contractor, whichever occurs first, free and clear of all liens, claims, security, interest or encumbrance; and that none of the Work and none of the Stored Materials covered by the Application for Payments will have been acquired by the Contractor, or by any other person performing the Work at the site or providing materials and equipment to the Project, subject to an agreement under which an interest therein or encumbrance thereon is retained by the seller or otherwise imposed by the Contractor or such person.

3.2.11 In the event stored materials which City is paying for in advance of their being installed or incorporated into the Project pursuant to this Paragraph are not installed or incorporated into the Project within thirty (30) days of when they are delivered to the site, Contractor shall not be entitled to payment for any future stored materials on this Project and the amounts previously approved for payment for said materials shall be deducted from the Contractor's next application for payment.

END OF SECTION II

SECTION III. SPECIAL PROVISIONS

SP-01 INTENT: The purpose of this project is to obtain a competent, experienced and responsible Contractor to construct the project in accordance with the plans and specifications, in an expeditious manner that reasonably protects the public and adjacent property from the construction of the project.

The Contract Documents comprise the entire agreement between City and Contractor concerning the work. The Contract Documents are complementary; what is called for by one is as binding as if called for by all. The Contract Documents will be construed in accordance with the law of the place of the project. The work specified herein shall consist of furnishing all supervision, labor, equipment, material and any incidentals required for the successful completion of all work as specified herein. All work shall conform within the limits as specified and shown and be in conformance with the appropriate Technical Specifications contained herein.

The plans, technical specifications, and other documents provided are intended to provide the Contractor with known conditions of the existing site and proposed work area. The Contractor is responsible to conduct any and all investigation, survey, or other activities required to fully understand the existing site and conditions that will be encountered during the project, and on which their bid will be based. Additional investigations may be necessary for the purposes of carrying out the construction project. The City of North Port will not consider or approve any claim for additional time or monetary compensation submitted by the Contractor caused by unknown site conditions or a failure by the Contractor to fully investigate and understand the full extent and nature of the work. This includes, but is not limited to, existing utilities as well as subsurface conditions.

SP-02 EQUIPMENT: The Contractor shall only use equipment, machines, or combination of machines that are in good and safe working condition. The equipment shall produce results that meet or exceed the Technical Specifications stated herein.

Equipment incapable of providing this will not be acceptable for use on this Project. The Contractor shall not use equipment which is unsafe or in need of repair. Work completed with equipment, which is not properly functioning, shall be deemed unacceptable.

SP-03 CONSTRUCTION SCHEDULE: The work will be substantially complete within 90 calendar days with final completion within 30 calendar days after attaining Substantial Completion as established by the City. The date for **Final Completion** of the Project shall be established as **120 calendar days after** Notice to Proceed**.**

The Contractor shall furnish copies of the Construction Schedule to the City when requested to perform the work as outlined in the Bid Form. The City will notify the Contractor of such as needed work and the Contractor will provide a Construction Schedule to the City within thirty (30) days of the City's notification. A project update meeting will be held bi-weekly, or as required during contract.

SP-04 PRE-CONSTRUCTION CONFERENCE: A Pre-Construction Conference will be held, at which time the Contractor shall submit the following for the City's approval or acceptance:

> A telephone list specifying the name, address, office phone number and cell phone numbers of all subcontractors or suppliers to be used on this project. If the Contractor proposes to subcontract any survey work that may be required, the Contractor shall include the registration number of the surveyor. The

telephone list shall also include emergency telephone numbers. The Contractor shall include a 24-hour emergency telephone for the City's use, which the Contractor shall update as necessary throughout the project. The Contractor shall request, in writing, any changes in subcontractors or suppliers.

No change in subcontractors or suppliers shall be made without written consent from the City.

- In addition to the telephone and facsimile numbers, the Contractor shall provide an e-mail address where emails can be sent. The e-mail address must be monitored at least daily and capable of transferring electronic files.
- The Contractor shall submit to the City a list of equipment the Contractor proposes to utilize on this project.
- The Contractor shall submit for City approval a paper copy and electronic copy of a Construction Schedule prepared using City approved software, and a Schedule of Progress Payment Requests.
- The Contractor shall also submit all other materials or mix designs, which will be used by the Contractor for this Contract.

Mobilization may not start until all submittals have been accepted by the City and/or City's Representative. Once approved, no changes will be allowed without the written approval of the City and/or the City's Representative.

The Contractor shall also provide, on a monthly basis, an update to the Construction Schedule reflecting changes made as a result of such reasons as weather, breakdowns, and unanticipated delays, as a means of better monitoring the project.

SP-05 PROGRESS MEETING: For this project, progress meetings shall be bi-weekly during or as needed. The Contractor shall designate a representative to attend Progress Meetings held at the North Port Utilities Office, 6644 West Price Boulevard, North Port, Florida. The Contractor shall submit, at each meeting, up-to-date schedule information, a written projected schedule for the next two weeks, written claims for additional compensation, written claims for weather days to extend the Contract, results of all testing and Value Engineering Proposals. The City will use the updated schedule information to monitor the Contractor's production rate. Upon written notice from the City, the Contractor shall dedicate additional resources to increase the production rate such that the Contractor will be back on schedule. Failure to comply with the approved Construction Schedule shall result in the Contractor being considered in default and subject to suspension of this Contract. Contractor may request progress meetings be on a different schedule than bi-weekly provided the City can confirm work is proceeding expeditiously. City may require a return to bi-weekly progress meetings at any time.

SP-06 COOPERATION WITH UTILITIES: The Contractor shall notify all utility owner(s) affected by the construction prior to beginning work. Any expense of utility repair or other damage due to Contractor's operations shall be borne by the Contractor. Protection of utilities shall be the responsibility of the Contractor, who shall provide adequate protection to maintain proper service.

NOTE: The Contractor is to include within his bid prices, the costs to protect, and/or support, all above ground, overhead and underground utilities, which may be in conflict with the construction of this proposed project.

Attention is called to the Florida Underground Facility Damage Prevention and Safety Act defined in Florida Statute. This act provides for a "One Call Toll Free" telephone number to be used by all parties doing excavation, demolition or other underground construction.

SP-07 CONTRACT TIME: The Contractor specifically agrees that it will commence operations within a mutually agreed upon time following notification by the City to commence work and that all work to be performed under the provisions of this Contract shall be completed not more than **120 calendar days after** Notice to Proceed subject only

to delays caused through no fault of the Contractor or acts of God. Time is of the essence in the performance of this Contract. The contract time includes up to fourteen (14) calendar days for City and/or City's Engineer of Record review of each submittal and resubmittal. There shall be no extension of time provided for modification and corrections or re-submittals to address deficiencies therein identified during the review by the City and/or City's Engineer of Record.

The work will be substantially complete within **90 calendar days** with final completion within **30 calendar days** after attaining Substantial Completion as established by the City. The entire project work will be substantially complete within - **90 calendar days** of the Notice to Proceed; with **final completion within 30 calendar days** after attaining Substantial Completion as established by the City. City shall provide the Contractor with a listing of items to be corrected or completed (punch list) after Substantial Completion is issued. The punch list will identify the remaining items that must be addressed to the satisfaction of the City by the Contractor to meet his/her obligations under the Contract. The Contractor shall complete all items on the punch lists to the satisfaction of the City prior to submittal of the application for final payment.

All extensions to the Contract time for permitted delays shall be by Change Order and signed by the City.

SP-08 PROJECT COMPLETION: Project final completion shall be defined as "the stage in the progress of the Work where the Work is complete in accordance with the Contract Documents so that the City can begin to utilize the Work for its intended use, all punch list items are complete, and the Contractor has completely demobilized from the project area." Project final completion shall not be more than **120 calendar days.**

SP-09 LIQUIDATED DAMAGES: The work shall be completed within the contract time as required by SP-08 "PROJECT COMPLETION." The contract time shall include the preparation, submittal, review and approval of submittals, delivery of materials, and construction, assembly, adjustment and placement into service for beneficial use of all facilities covered under this Contract. The City of North Port shall issue a Notice of Completion when it has determined that the work identified in the contract has been completed per SP-08 "PROJECT COMPLETION."

The City and the Contractor hereby agree that time is of the essence on this Contract and the City will suffer damages if the work is not completed within the contract time as required by SP-07 "Contract Time". It is further recognized and agreed by the City and the Contractor that the determination of the exact value of the damages the City would suffer due to a delay in the Completion of the work would be a difficult, time consuming and costly process. It is therefore hereby agreed by the City and the Contractor that it is in their mutual interest to establish a figure of FOUR HUNDRED AND THREE DOLLARS ($403) as Liquidated Damages (but not as a penalty) to be paid by the Contractor to the City for each calendar day that Completion is delayed beyond the Contract Time. It is mutually agreed by the City and the Contractor that neither shall make any claim to increase or reduce the amount to be paid under Liquidated Damages as the result of any calculation of actual damages suffered by the City as the result of delay in the Completion of the work.

For all contracts, regardless of whether the contract time is stipulated in calendar days or working days, the City will count default days in calendar days. If the Contractor or, in case of his default, the surety fails to complete the work within the time stipulated in the Contract, or within such extra time that the City may have granted the Contractor or, in case of his default, the surety shall pay to the City, not as a penalty, but as liquidated damages, in the amount of FOUR HUNDRED AND THREE DOLLARS **$403** per calendar day in which work is not completed.

The City has the right to apply, as payment on such liquidated damages, any money the City owes the Contractor.

The City does not waive its right to liquidated damages due under the Contract by allowing the Contractor to continue and finish the work, or any part of it, after the expiration of the Contract Time including granted time extensions.

In the case of default of the Contract and the completion of the work by the City, the Contractor and his surety are liable for the liquidated damages under the Contract, but the City will not charge liquidated damages for any delay in the final completion of the City's performance of the work due to any unreasonable action or delay on the part of the City.

The City considers the Contract complete when the Contractor has completed all work and the City has accepted the work. The City will then release the Contractor from further obligation except as set forth in his bond.

SP-10 DAMAGES: Areas adjacent to the construction that are damaged shall be repaired at the Contractor's expense. Restoration of adjoining areas shall be equal to or better than original condition and to the satisfaction of the City. Protection of personal property, utilities, structures, access drives, conduits, pavement, curbs, sidewalks, trees, and shrubs shall be the responsibility of the Contractor, who shall provide adequate protection to maintain proper service.

SP-11 CONTINUOUS PROSECUTION OF WORK: The Contractor shall continuously prosecute the work in accordance with the Contract Documents. Upon written direction from the City, the Contractor shall remove any personnel for the duration of the Contract, who fails to comply with the Contract Documents.

Once commencing the project, the operation must be continuously prosecuted during normal hours to its completion. At no time, shall the Contractor suspend work, for any reason for more than seven (7) calendar days, excluding delays granted for inclement weather. Should the Contractor fail to perform any work on the project for three (3) or more work days, the Contractor shall submit a written request to the City, no less than twenty- four (24) hours in advance of the restart of work, to allow the City to schedule the required inspection personnel. No work may restart, prior to the expiration of the twenty-four (24) hour notice without the City's approval.

Correction of safety concerns will be given priority and shall be corrected as soon as practicable, but not later than 24 hours after discovery by the City and notification to the Contractor. Failure to comply with these Provisions and/or Technical Specifications shall result in the Contractor being considered in default and subject to suspension of this contract.

SP-12 SAFETY AND PROTECTION*:*

A. Contractor shall be responsible for initiating, maintaining, and supervising all safety precautions and programs in connection with the work. Contractor shall take all necessary precautions for the safety of and shall provide the necessary protection to prevent damage, injury or loss to:

   i. All employees on the work and other persons or organizations who may be affected thereby.
   ii. All the work and materials and equipment to be incorporated therein, whether in storage on or off the site.

B. Other property at the site or adjacent thereto, including trees, shrubs, lawns, walks, pavements, roadways, structures, utilities, and underground facilities not designated for removal, relocation or replacement in the course of construction. Contractor shall comply with all applicable Laws and Regulations of any public body having jurisdiction for the safety of person or property or to protect them from damage, injury or loss; and shall erect and maintain all necessary safeguards for such safety and protection.

C. All personnel working within the City's right-of-way shall at all times wear City approved safety vests, including personnel who may only briefly be out of their vehicle (i.e., supervisors, truck drivers).

D. No open excavations are allowed on the project. Any pipe installation shall be backfilled properly the

same day of work on such pipe area to allow safe passing of pedestrians and vehicles. The Contractor shall immediately remove any personnel who fail to conform to this requirement.

E. Contractor shall designate a responsible representative at the site whose duty shall be the prevention of accidents. This person shall be the contractor's superintendent unless otherwise designated in writing by Contractor to City.

SP-13 CHANGES IN THE WORK: The City, without invalidating the Contract, may order extra work or make changes by altering, adding to or deducting from the work, the Contract sum being adjusted accordingly. Such work will be an **amendment to the contract** and shall require approval by the City Manager prior to prosecution of the additional work. The change and amount of compensation must be agreed upon in writing in a document of equal dignity herewith prior to any deviation from the terms of this Contract. In giving instructions, the City shall have authority to make minor changes in the work, not involving extra cost, and not inconsistent with the purposes of the work. Except in an emergency endangering life or property, no extra work or change shall be made unless in pursuance of a written order by the City; and no claim for an addition to the Contract sum shall be valid, unless ordered.

Contingency: An amount added to an estimate to allow for items, conditions, or events for which the state, occurrence, or effect is uncertain and that experience shows will likely result, in aggregate, in additional costs. All contingency items will require approval from the Purchasing Manager or designee, the Finance Director and City Manager prior to any work being performed.

Value of any such extra work or change shall be determined in one or more of the following ways:

1. By estimate and acceptance in a lump sum.
2. By unit prices named in the contract or subsequently agreed upon.
3. By cost and percentage or by cost and a fixed fee.
4. By Change order executed by City Manager
5. By Contingency Authorization (executed by City Manager).

If none of the previous methods are agreed upon, the Contractor, provided he receives an order as above, shall proceed with the work. In such case and also under case, he shall keep amendment in such form as the City may direct, a correct amount of the net cost of labor and materials, together with vouchers. The City shall certify to the amount, including reasonable allowance for overhead and profit, due to the Contractor. Pending final determination of value, no payment on changes shall be made.

SP-14 AVAILABILITY OF LANDS: Work is planned to occur within City rights of way or existing utility easements. Work is not planned to occur within FDOT rights of way. The Contractor will not need to obtain a right of way use permit(s) from the City of North Port for this project.

SP-16 COORDINATION OF THE SPECIFICATIONS: Where conflicts between the City of North Port General Provisions, Special Provisions, Technical Specifications and Construction Plans, references, should they exist, it is the responsibility of the bidding Contractor to bring those conflicts to the attention of the Purchasing Agent prior to the bid date. After bids, have been received, the Contractor will be held to the most stringent requirement.

The Contractor shall take no advantage of any apparent error or omission in the plans or specifications. If the Contractor discovers such an error or omission, he shall immediately notify the City. The City will then make such corrections and interpretations as may be deemed necessary for fulfilling the intent of the plans and specifications.

SP-17 CONSTRUCTION PERMITS: The Contractor shall be responsible for obtaining and complying with all permit

requirements of the Department of Health Permit. Pressure testing the system shall be paid for by the Contractor. Permits and licenses necessary for the prosecution of the work shall be secured by the Contractor.

For this project, Right of Way (ROW) permit(s) will not be required.

SP-18 NOTICE-OF-INTENT (NOI): If necessary, the Contractor for the project shall submit a Notice of Intent to Use Generic Permit for Stormwater Discharge from Large and Small Construction Activities, along with the permit fee with the Florida Department of Environmental Protection.

SP-19 CONTRACTOR'S UNDERSTANDING: It is understood and agreed that the Contractor has, by careful examination, satisfied himself as to the nature and locations of the work, the conformation of the ground, the character, quality, and quantity of materials to be encountered, the character of equipment and facilities needed prior to and during prosecution of the work under this Contract. No verbal agreement or conversation with any officer, agent, or employee of the City, either before or after execution of this Contract, shall affect or modify the terms or obligations herein contained.

SP-20 ERRORS OR OMISSIONS IN PERMITS, PLANS OR SPECIFICATIONS: The Bidder shall take no advantage of any apparent error or omission, which may be discovered in the Permits, Plans or Specifications but shall forthwith notify the City Representative of such discovery, who will then make such correction and interpretations as deemed necessary for reflecting the actual spirit and intent of the Permits and Specifications.

SP-21 ROAD/LANE CLOSURE: No road closures are allowed. A lane closure request must be submitted in writing five (5) business days in advance of the requested lane closure. The time and length of closure(s) shall be approved by the City of North Port. The Contractor shall provide a Maintenance of Traffic (MOT) Plan for the requested lane closure(s) for review and approval by the City of North Port.

SP-23 MAINTENANCE OF TRAFFIC: The Contractor shall be responsible for all maintenance of traffic and obtaining approval of a Maintenance of Traffic (MOT) Plan from the City for work within the ROW of any City Road. The Contractor shall maintain traffic at all times during construction.

SP-24 DEWATERING: The Contractor shall request approval from the City of North Port Project Manager before applying for a permit from the Southwest Florida Water Management District for dewatering. The Contractor pays the fees associated for obtaining this permit.

SP-25 PRIVATE PROPERTY: The Contractor shall not occupy private land outside of any easements or rights of way unless a written authorization has been signed by the property owner. It shall be the Contractor's responsibility to obtain these agreements prior to construction, if required. Prior to the use of private lands, the Contractor shall submit a copy of the agreement(s) to the City. In the event that the Contractor uses private property for any purpose without first having obtained the necessary approvals from the property owner or provided the necessary agreement to the City, the City will direct the Contractor in writing to immediately cease using such property.

Prior to application for final payment, the Contractor shall provide documentation from the owner of each piece of private property for which an agreement for use was provided, or for which the City has issued written notification to the Contractor, that each owner is satisfied with the manner in which the Contractor has restored the property. Final payment or reduction in retainage shall not be paid until such documentation is received by the City.

Any areas, outside of the rights-of-way or easements that are impacted or damaged by the Contractor's activities shall be repaired at the Contractor's expense to the property owner's satisfaction. Restoration of impacted areas shall be

equal to or better than original condition and to the satisfaction of the property owner. The Contractor shall be responsible to secure written approval of the restoration of the property from the property owner and submitting a copy to the City prior to requesting Substantial Completion. The City shall not release retainage to the Contractor until such time as the approvals are submitted by the Contractor.

SP-26 RESIDENTS CONCERNS: During the work of this Contract, residents may contact the City to question the progress of the work or express concerns regarding the work. These concerns are responded to by City's Utilities Department, but normally the Contractor will have more detailed information on the actual scheduling of the work or corrective measures required. Therefore, the Contractor will provide a telephone number and email address where City's Utilities Department can fax or email inquiries. The Contractor shall respond to these inquiries within two (2) business days detailing how the inquiry will be addressed and the time frame the Contractor will take in addressing this inquiry. City's Utilities Department will maintain a log of inquiries, which will be reviewed at each progress meeting.

SP-27 TESTING: Any and all testing requirements born out of, but not limited to contract requirements and permits, for the installation of utility piping, including but not limited to, pressure testing, will be included in the Contractor's bid price. Testing shall include all utilities installed as part of the work of these Contract Documents. Testing will be arranged in advance with an independent testing firm (also included in the bid price) for the testing of concrete and compaction. The City requests to be notified three (3) business days in advance of any test in order to have a City representative and the Engineer of Record, if required, present. Where less time for notice is specified in the specifications or plans, this special provision shall prevail.

SP-28 MISCELLANEOUS ITEMS: Miscellaneous items and accessories which are not specifically mentioned, but which are essential to produce a complete and properly operating installation, or usable structure or plant, providing the indicated function, shall be furnished and installed without change in the Contract Price. Such miscellaneous items and accessories shall be of the same quality standards, including material, style, finish, strength, class, weight and other applicable characteristics, as specified for the major component of which the miscellaneous items or accessory is an essential part, and shall be approved by the City's Engineer of Record before installation. The above requirement is not intended to include major components not covered by or inferable from the Drawings and Specifications.

SP--29 SOURCES OF WATER FOR TESTING, CLEANING, AND OTHER CONSTRUCTION PURPOSES: Pipe pressure and flow testing and flushing may be done with potable water. If potable water is required for the Work of this Contract, all Contractors' connection(s) to the City potable water supply shall allow the City to meter the amount of water used. All potable water connections shall include a reduced pressure zone backflow preventer. The Contractor is responsible for obtaining meter(s), backflow preventers, and associated appurtenances, and paying all appropriate fees/deposits. Contractor shall not use any potable water until meter and backflow preventer are installed. The Contractor will set up an account with the City and will be billed at the City's normal rates for actual potable water used. Any fees/deposits due back to the Contractor will be returned after the project is completed and the meter is removed.

SP--30 PRE-INSTALLATION VIDEO: No construction shall take place prior to the City's acceptance of the Pre-Installation Video. The video shall thoroughly capture the intended work area as outlined in the Contract Documents. The Pre- Installation Video will be used to protect all parties involved in the project.

SP--31 PERIODIC CLEAN UP AND RESTORATION: During construction, the Contractor shall regularly remove from site and properly dispose of all accumulated debris and surplus material of any kind that result from their operations. The Contractor shall remove unsightly mounds of earth, large stones, boulders, and debris so the site presents a neat appearance. Burial of construction debris is not permitted. Unused tools and equipment shall be stored at the Contractor's yard or base of operations for the project. When the contract work involves ROWs, private property,

roadways, private driveways or access roads, easements and sidewalks, and any site work that may impede pedestrian or vehicular traffic while the installation work is in progress, the Contractor shall backfill, grade, compact, and otherwise restore the area to the basic condition which existed prior to work in order to allow vehicular and pedestrian use. All areas should be restored to their original design grade to facilitate drainage.

SP-32 MAINTENANCE OF FLOW: It is the Contractor's responsibility to maintain the flow of the existing potable water, wastewater force mains, sanitary sewers, plant headworks with bypass pumping as needed and lift stations during the construction. Maintenance of flow is considered incidental to the work and shall be done at no additional cost to the City.

SP--33 CITY RIGHT-OF-WAY RESTORATION: The ROW restoration includes all procedures to restore the ROW to a condition equal to or better than the original condition to the satisfaction of the City. The Contractor shall be responsible for restoration of items including but not limited to existing structures, stabilized roads, and ground areas damaged during construction.

During installation of new utilities, the Contractor shall maintain, an undisturbed existing buffer strip of ground cover measuring a minimum of one foot (1') in width from the edge-of- pavement (EOP) in order to minimize potential erosion along the pavement edge. The Contractor shall be responsible for all costs to restore this buffer strip if disturbed during construction.

SP--34 LABOR, MATERIALS AND EQUIPMENT: The Contractor will provide competent, suitably qualified personnel to survey and lay out the Work and perform construction as required by the Contract Documents. He will at all times maintain good discipline and order at the site.

The Contractor will furnish all materials, equipment, labor, transportation, construction equipment and machinery, tools, appliances, fuel, power, light, heat, local telephone, water and sanitary facilities and all other facilities and incidentals necessary for the execution, testing, initial operation and completion of the Work.

All materials and equipment will be new, except as otherwise provided in the Contract Documents. When special makes or grades of material which are normally packaged by the supplier or manufacturer are specified or approved, such materials shall be delivered to the site in their original packages or container with seals unbroken and labels intact.

All materials and equipment shall be applied, installed, connected, erected, used, cleaned and conditioned in accordance with the instructions of the applicable manufacturer, fabricator or processors, except as otherwise provided in the Contract Documents.

SP--35 MATERIALS, EQUIPMENT, PRODUCTS, AND SUBSTITUTIONS: Materials, equipment and products incorporated in the Work must be approved for use before being purchased by the Contractor. The Contractor shall submit to the City a list of proposed materials, equipment or products, together with such samples as may be necessary of him to determine their acceptability and obtain his approval. No request for payment for "or equal" equipment will be approved until this list has been received and approved by the City.

Whenever a material, article or piece of equipment is identified on the Drawings or Specifications by reference to brand name or catalog number, it shall be understood that this is referenced for the purpose of defining the performance or other salient requirements and that other products of equal capacities, quality and function shall be considered per 40 CFR 33.255(c) as referenced in Chapter 62-552, FAC. The Contractor may recommend the substitution of a material, article, or piece of equipment of equal substance and function for those referred to in the

Contract Documents be reference to brand name or catalog number, and if, in the opinion of the City, such material, article, or piece of equipment is of equal substance and function to that specified, the City may approve its substitution and use by the Contractor. Incidental changes or extra component parts required to accommodate the substitute will be made by the Contractor without a change in the Contract Price or Contract Time.

No substitute shall be ordered or installed without the written approval of the City who shall be the judge of equality.

Delay caused by obtaining approvals for substitute materials will not be considered justifiable grounds for an extension of construction time.

Should any work or materials, equipment or products not conform with requirements of the Drawings and Specifications or become damaged during the progress of the Work, such Work or materials shall be removed and replaced, together with any work disarranged by such alteration, at any time before completion and acceptance of the Project. All such work shall be done at the expense of the Contractor.

No materials or supplies for the Work shall be purchased by the Contractor or by any Subcontractor subject to any chattel mortgage or under a conditional sale or other agreement by which an interest is retained by the Seller. The Contractor warrants that he has good title to all materials and supplies used by him in the Work.

SP--36 USE OF PREMISES: The Contractor shall confine his apparatus, storage of materials, and operations of his workmen to limits indicated by law, ordinances, permits, and directions of City, and shall not unnecessarily encumber any part of the site.

Contractor shall not overload or permit any part of any structure to be loaded with such weight as will endanger its safety, nor shall he subject any part of the Work to stresses or pressures that will endanger it.

Contractor shall enforce City's instructions in connection with signs, advertisements, fires and smoking.

Contractor shall arrange and cooperate with City in routing and parking of automobiles of his employees, Subcontractors and other personnel, and in routing material delivery truck and other vehicles to the Project site.

SP--37 SURVEY: All survey monuments and benchmarks that may be disturbed during construction shall be referenced and replaced by the Contractor. All monuments and benchmarks disturbed or destroyed by the Contractor or any of his forces through accident or negligence shall be replaced by a Florida Licensed Professional Land Surveyor at the Contractor's expense.

SP--38 MANUFACTURER'S LITERATURE: Manufacturer's literature, when referenced, shall be dated and numbered and is intended to establish the minimum requirements acceptable. Whenever reference is given to codes, or standard specifications or other data published by regulating agencies or accepted organizations, including but not limited to National Electrical Code, applicable State Building Code, Federal Specifications, ASTM Specifications, various institute specifications, and the like, it shall be understood that such reference is to the latest edition including addenda in effect on the date of Bid.

SP--39 BRAND NAMES: Brand names where used in the technical specifications, are intended to denote the standard of quality and performance required of the particular material or product. The term "equal" or "equivalent", when used in connection with brand names, shall be interpreted to mean a material or product that is similar and equal in type, quality, size, capacity, composition, finish, color and other applicable characteristics to the material or product specified by trade name, and that is suitable for the same use and capable of performing the same function, in the

opinion of the City's Engineer of Record, as the material or product so specified. The City's Engineer of Record must approve proposed equal items before they are purchased or incorporated in the Work.

SP--40 RECORD DRAWINGS: The Contractor will keep one record copy of all Specifications, Drawings, Addenda, Modifications, and Shop Drawings at the site in good order and annotated to show all changes made during the construction process. Record Drawings shall list all equipment removed from existing facilities. These shall be available to the City, City's Representative, City's Engineer of Record, and to the State of Florida Department of Environmental Protection (FDEP), and shall be delivered by him to the City upon completion of the Project. It shall be used for this purpose only. Final payment will not be made until receipt and approval by the City of Record Drawings.

SP--41 RECORD DRAWINGS CERTIFICATION: The certification statement shall be as follows:
"I hereby certify that the as-built location information of the water and/or wastewater facilities shown on these drawings conforms to the Minimum Technical Standards for Land Surveying in the State of Florida, chapter 5J-17.052 (Florida Administrative Code), as adopted by the Department of Agriculture and Consumer Services, Division of Consumer Services, Board of Professional Surveyors and Mappers in 2010, and that said as-builts are true and correct to the best of my knowledge and belief as surveyed under my direction."

SP--42 COMPLETION OF THE PROJECT: The Completion of the project shall be accomplished and finalized prior to submittal of the application for final payment by the Contractor. The City shall determine the date of completion for the project when at the minimum, the following are met as well as all other conditions defined in the Contract Documents:

- All punch list items have been addressed to the satisfaction of the City;
- All testing has been completed and results are satisfactory (including but not limited to Pipe Pressure Test, Concrete, and Compaction Tests);
- Record Drawing requirements have been accepted and approved by the City and all other governmental agencies, if applicable;
- All associated equipment and facilities necessary for the reliable operation of the project are complete in accordance with contract requirements; and,
- All release of liens have been submitted and are satisfactory to the City, certifying that all payrolls, material bills, and other indebtedness incurred by the Contractor in connection with this project have been paid in full.

SP--43 STORED MATERIALS: Payment for stored materials will made in accordance with Section 3.2 Storage of Materials of the General Provisions.

SP--44 PAYMENT ADJUSTMENT: The following will apply: This Contract will *not* provide for fuel or other payment adjustments due to increase in material costs during the life of the contract.

SP--45 TERMINOLOGY: Throughout the Contract Documents, references to City or Owner shall, where appropriate, refer to the City of North Port, a municipal corporation of the State of Florida. References to Utilities Department and North Port Utilities refer to the City of North Port's Utilities Department and are used interchangeably. References to Engineer or "Resident Project Representative" may, where appropriate, refer to either the City's Engineer of Record for the Project, which is CDM Smith, or to the City's Utilities Engineering Manager.

The terms General Conditions and General Provisions are used interchangeably in the Contract Documents. The terms Special Conditions and Special Provisions are used interchangeably in the Contract Documents.

The term "Contract Documents" is used interchangeably with "Agreement."

SP--46 WORK HOURS: The Contractor shall conduct work between 7 A.M. and 3:30 P.M. Monday through Friday, which is defined as regular work hours. The Contractor shall not conduct work on Saturdays, Sundays, legal holidays or holidays observed by the City. Work conducted outside of the regular work hours and days shall be permitted only with written permission from the City. Any additional cost incurred by North Port Utilities and/or the Engineer of Record for work outside these hours will be paid by the Contractor.

SP--47 NOTIFICATIONS OF 48 HOURS: Wherever the technical specifications or plans indicate a minimum of 48 hours' notice to Owner/City or Engineer, this special provision shall prevail dictating a minimum of three (3) business days' notice to Owner/City or Engineer.

SP--48 QUALIFICATIONS/REFERENCES: Contractor shall submit a minimum of three (3) recent (within the past five (5) years) references of projects of similar size and scope involving water main installation, connections to existing water mains, and all associated testing, miscellaneous work, restoration, and clean-up.. Each reference shall include a project description, project location, name and phone number of a contact person, total project amount, and completion date. The City reserves the right to contact references. Bidder is referred to MINIMUM QUALIFICATIONS AND REFERENCE FORM included later herein.

The Contractor/Subcontractor qualification requirements include the following criteria:

Surface preparation and coating of wastewater infrastructure.

SP--49 LICENSE(s) REQUIREMENT: Certified General Contractor OR Certified Underground Utilities Contractor.

SP--50 CITY'S STATUS: The City shall examine and inspect the work to assure compliance with the requirements of these Contract Documents. The City shall determine the quality and acceptability of materials and workmanship relative to the requirements of the Plans and Technical Specifications. The City has the authority as follows:

1. To stop the work whenever such stoppage may be necessary to insure the proper execution of the Contract.
2. To reject all work which does not conform to the Contract.
3. To resolve questions which arise in the execution of the work.
4. To stop work whenever materials or shop drawings have not been approved prior to placement.
   No additional time or compensation will be added to the Contract when stopping the work for the above listed reasons.

SP--51 CRITERIA FOR AWARD: The award shall be let to the lowest responsive, responsible bidder who fulfills all criteria and specifications with consideration to favorable references and whose evaluation by the City indicates that the award will be in the best interest of the City.

The City reserves the right to reject the bid proposal of any bidder who has previously failed to perform properly, or on time, contracts of similar nature; or who is not in a position to satisfactorily perform the contract.

END OF SECTION III

SECTION IV. INSURANCE

Before performing any Contract work, the Contractor shall procure and maintain, during the life of this Contract, the following types of insurance coverage and shall furnish certificates representing such insurance to the City. The policies of insurance shall be primary and written on forms acceptable to the City and placed with insurance carriers approved and licensed by the Insurance Department in the State of Florida and meet a minimum financial AM Best and Company rating of no less than "A- Excellent: FSC VII." No changes are to be made to these specifications without prior written approval by the City Manager or designee. The City Manager or designee may alter the amounts or types of insurance policies required by this Contract upon agreement with Contractor.

WORKERS COMPENSATION: Coverage to apply for all employees for Statutory Limits in compliance with the applicable state and federal laws. The policy must include Employers' Liability with a limit of $1,000,000 each accident; $1,000,000 each employee; and $1,000,000 policy limit for disease**.**

COMPREHENSIVE GENERAL LIABILITY: Occurrence form required. Aggregate must apply separately to this Contract/job. Minimum $1,000,000 each occurrence; $1,000,000 general aggregate; $1,000,000 products and completed ops; and $100,000 fire damage. The city is to be name additionally insured.

***BUSINESS AUTOMOBILE LIABILITY*:** To include all vehicles owned, leased, hired and non-owned vehicles with limits of not less than $1,000,000 per each accident and for property damage and bodily injury, with Contractual liability coverage for all work performed under this agreement. The city is to be named additionally insured.

ENVIRONMENTAL/POLLUTION LIABILITY: Not required unless chemicals are being used that are listed as hazardous on www.epa.gov website. In the event that hazardous chemicals are to be used, Contractor shall provide an Environmental/Pollution Liability policy in an amount of:

- General Aggregate $3,000,000.
- Each Occurrence $1,000,000.

Contractor shall notify City prior to usage of hazardous chemicals so that adequate insurance coverage is provided prior to usage of such chemicals. Failure to so notify City shall be deemed a material breach of this Contract.

All insurance policies must be issued by companies of recognized responsibility licensed to do business in Florida and must contain a provision that prohibits cancellation unless the CITY is provided notice as stated within the policy. It is the Contractor's responsibility to provide notice to the CITY.

A. Special Requirements:

1. Occurrence Basis: All policies required by this Contract, with the exception of Workers' Compensation, or unless specific approval is given by Risk Management through the City's Purchasing Office, are to be written on an occurrence basis. Claims Made Policies will be accepted for professional and hazardous materials and such other risks only as authorized by the City's Purchasing Office. All Claims Made Policies contributing to the satisfaction of the insurance requirements herein shall have an extended reporting period option or automatic coverage of not less than two (2) years. If provided as an option, the Contractor agrees to purchase the extended reporting period on cancellation or termination unless a new policy is affected with a retroactive date, including at least the last policy year.

2. Additional Insured: All policies required by this Contract, with the exception of Workers' Compensation, or unless specific approval is given by Risk Management through the City's Purchasing Office, shall name the City of North Port, its

Commissioners, officers, agents, employees and volunteers as their interest may appear under this Contract. This MUST be written in the description of operations section of the insurance certificate, even if there is check-off-box on the insurance certificate. Any costs for adding the City as "additional insured" shall be at the Contractor's expense.

Certificates of Insurance: All certificates of insurance must be on file with and approved by the City before commencement of any work activities under this Contract. All certificate(s) of insurance required herein must be accompanied by a copy of the additionally insured documents/endorsements. (Certificates of Insurance evidencing claims made or occurrences form coverage and conditions to this Contract, as well as the contract number and description of work, are to be furnished to the City's Purchasing Office (4970 City Hall Boulevard, Suite 337, North Port, FL 34286) prior to commencement of work AND a

1. minimum of thirty (30) calendar days prior to expiration of the insurance contract when applicable. The Certificate of Insurance issued by the underwriting department of the insurance carrier shall certify compliance with the insurance requirements provided herein.

2. Premiums and Deductibles: The Contractor shall be solely responsible for payment of all premiums for insurance contributing to the satisfaction of this Contract and shall be solely responsible for the payment of all deductibles and retention to which such policies are subject, whether or not the City is an insured under the policy. The Contractor's insurance is considered primary for any loss regardless of any insurance maintained by the City. The Contractor is responsible for all insurance policy premiums, deductibles, SIR (self-insured retentions) or any loss or portion of any loss that is not covered by any available insurance policy.

3. Waiver of Subrogation*:* All required insurance policies are to be endorsed with a waiver of subrogation. The insurance companies, by proper endorsement or thru other means, agree to waive all rights of subrogation against the City, its officers, officials, agents, employees, affiliates and volunteers, and the City's insurance carriers, for losses paid under the terms of these polices that arises from the contractual relationship or work performed by the Contractor for the City. It is the Contractor's responsibility to notify each insurance company of the Waiver of Subrogation and request written authorization or the proper endorsement. Additionally, the Contractor, its officers, officials, agents, employees, volunteers, and any subcontractors, agree to waive all rights of subrogation against the City, its officers, officials, agents, employees, affiliates and volunteers, and the City's insurance carriers for any losses paid, sustained or incurred, but not covered by insurance, that arise from the contractual relationship or work performed. This waiver also applies to any deductibles or self-insured retentions for which the Contractor or its agents may be responsible for.

B. Policy form

i. All policies, required by this Agreement, with the exception of Professional Liability and Workers Compensation, or unless specific approval is given by Risk Management through the City's Purchasing Office, are to be written on an occurrence basis, shall name the City of North Port, its Commissioners, officers, agents, employees and volunteers as additional insured as their interest may appear under this Agreement. Insurer(s), with the exception of Professional Liability and Workers Compensation, shall agree to waive all rights of subrogation against the City of North Port, its Commissioners, officers, agents, employees orvolunteers.

ii. Insurance requirements itemized in this Agreement, and required of the Contractor, shall be provided by or in behalf of all Subcontractors to cover their operations performed under this Agreement. The Contractor shall be held responsible for any modifications, deviations, or omissions in these insurance requirements as they apply to Subcontractors.

iii. Each insurance policy required by this Agreement shall:

1. Apply separately to each insured against whom claim is made and suit is brought, except with respect to

limits of the insurer's liability.

2. Be endorsed to state that coverage shall not be suspended, voided or cancelled by either party except after notice is delivered in accordance with the policy provisions. The Contractor is to notify the City Purchasing Office by written notice via certified mail, return receipt requested.

iv. The City shall retain the right to review, at any time, coverage, form, and amount of insurance.

v. The procuring of required policies of insurance shall not be construed to limit Contractor's liability nor to fulfill the indemnification provisions and requirements of this Agreement.

vi. The Contractor shall be solely responsible for payment of all premiums for insurance contributing to the satisfaction of this Agreement and shall be solely responsible for the payment of all deductibles and retentions to which such policies are subject, whether or not the City is an insured under the policy.

vii. Claims Made Policies will be accepted for professional and hazardous materials and such other risks as are authorized by the City's Purchasing Office. All Claims Made Policies contributing to the satisfaction of the insurance requirements herein shall have an extended reporting period option or automatic coverage of not less than two (2) years. If provided as an option, the Contractor agrees to purchase the extended reporting period on cancellation or termination unless a new policy is affected with a retroactive date, including at least the last policy year.

Certificates of Insurance evidencing Claims Made or Occurrences form coverage and conditions to this Agreement, as well as the agreement number and description of work, are to be furnished to the City's Purchasing Office (4970 City Hall Boulevard, Suite 337, North Port, FL 34286) prior to commencement of work AND a minimum of thirty (30) calendar days prior to expiration of the insurance contract when applicable. All insurance certificates shall be received by the City's Purchasing Office before the Contractor will be allowed to commence or continue work.

Applicants / bidders should carefully review their existing insurances and consider their ability to meet these requirements prior to submission. The requirements should be forwarded to their agent, broker, and insurance providers for review

END OF SECTION IV

BIDDER CHECKLIST

This checklist is provided to assist each Bidder in the preparation of their bid response. Included in this checklist are important requirements, which is the responsibility of each Bidder to submit with their response in order to make their response fully compliant. This checklist is only a guideline it is the responsibility of each Bidder to read and comply with the Invitation to Bid in its entirety (Instructions to Bidders, General Provisions, Special Conditions and Technical Provisions, Permits, Inspections Reports, Surveys, Insurance Requirements and all City Forms).

☐ THIS CHECKLIST, complete and sign

☐ 1. Fill out and sign **Bid Form (acknowledge addenda, bond information, subcontractors and suppliers, and Qualifications/Reference Form** if applicable**)**

☐ 2. Fill out and sign **Bid Price Schedule (unit prices must be filled in every block where applicable) (EXCEL SPREADSHEET, DO NOT PDF ON USB DRIVE)**.

☐ 3. Fill out **Statement of Organization** and have it properly notarized.

☐ 4. Provide **State of Florida Registration (http://www.sunbiz.org/search.html)**

☐ 5. Fill out and sign the **Non-Collusive Affidavit** and have it properly notarized.

☐ 7. Fill out and sign the **Conflict of Interest Form**

☐ 8. Fill out and sign **Public Entity Crime Information**

☐ 9. Fill out and Sign the **Drug Free Workplace Form**.

☐ 10. Fill out and sign the **"Local Business Affidavit"** or **"North Port Local Business Affidavit"** (not applicable for this project)

☐ 11. Fill out and sign and **notarize** the **Scrutinized Company Certification Form**

☐ 12. Fill out and sign **No Lobbying Affidavit**

☐ 13. Fill out and sign the **SWORN STATEMENT: THE FLORIDA TRENCH SAFETY ACT**

☐ 14. Provide **any additional documentation requested** within the Bid Document.

☐ 15. **Submit ONE (1) Original AND ONE (1) Copy of submittal AND** Provide **USB drive** (pdf of submittal and excel version of the Bid Schedule, If applicable)

☐ 16. Review "SAMPLE CONTRACT".

☐ 17. Clearly mark the sealed bid with the **BID NUMBER AND BID NAME** on the outside of the package AND YOUR COMPANY NAME.

BID BOND (INCLUDED IN SUBMITTAL) ☐ **YES** ☐ **NO**

PERFORMANCE BOND IS ONLY TO BE SUPPLIED BY THE AWARDED VENDOR AT TIME OF PRE CONSTRUCTION MEETING.

City of North Port
Finance Department/Purchasing Division
Keith Raney, Contract Administrator II
4970 City Hall, Suite 337
North Port, Florida 34286
RFB NO. 2019-40 CRANBERRY BRIDGE REPLACEMENT

Date:_____

Signed (*Person authorized to bind the company*): _____

Name (printed):_____ **Title:**_____

(***THIS PAGE MUST BE COMPLETED AND SUBMITTED***)

BID FORM

Name of Bidder: _____

Business Address: _____

_____

Telephone Number:_____Fax Number:_____

E-mail Address:_____

Contractor License #:_____

FEID #:_____

To the City Commission of the City of North Port pursuant to and in compliance with your notice inviting sealed bids (Invitation to Bid), Instructions to Bidders, and the other documents relating thereto, the undersigned bidder, having familiarized himself/herself with the terms of the Contract documents, local conditions affecting the performance of the Contract, and the cost of the work at the place where the work is to be done, hereby proposes and agrees to perform within the time stipulated in the Contract, including all of its component parts and everything required to be performed, and to provide and furnish any and all of the labor, material, tools, expendable equipment, and all utility and transportation services and design of certain items necessary to perform the Contract and complete in a workmanlike manner, all of the work required in connection with the construction of said work all in strict conformity with the plans and specifications and other Contract documents for the prices hereinafter set forth.

The undersigned, as bidder, does hereby declare that he has read the Request for Bids, Instructions to Bidders, General Provisions, Special Provisions, Technical Specifications & Conditions, Insurance Requirements, Bid Form, Permit Fees, Plan Revisions, Plans, and any other reports or documentation for: ***CRANBERRY BRIDGE CROSSING FOR WATER MAIN REPLACMENT*** and further agrees to furnish all items listed on the attached Bid Form in accordance with the unit price line items as indicated on the bid schedule form submitted. The above specified documents are herein incorporated into the Bid Form.

The undersigned as bidder, declares that the only persons or parties interested in this submittal as principals are those named herein; that this submittal is made without collusion with any person, firm, or corporation; and he/she proposes and agrees, if the proposal is accepted, that he/she will execute a Contract with the City in the form set forth in the Contract documents and that he/she will accept in full payment thereof the following prices, to wit:

TOTAL BID PRICE:

_____ **$**_____

(TYPE/PRINT) **(NUMERIC)**

Through the signing of this Bid Form, Bidder attests his/her bid is guaranteed for a period of not less than **NINETY (90) DAYS** from the date of the official bid opening.

Date:_____

Signed (*Person authorized to bind the company*): _____

Name (printed):_____ **Title:**_____

(***THIS PAGE MUST BE COMPLETED AND SUBMITTED***)

ADDENDA AND BOND FORM

The undersigned acknowledges receipt of the following addenda, and the cost, if any, of such revisions has been included in the bid price.

Addendum No.		Dated		**Addendum No.**		Dated	
Addendum No.		Dated		**Addendum No.**		Dated	
Addendum No.		Dated		**Addendum No.**		Dated	
Addendum No.		Dated		**Addendum No.**		Dated	

BID BOND AND PERFORMANCE/PAYMENT BOND

BID BOND: ACCOMPANYING THIS PROPOSAL IS _____
(insert: "cash", "bidder's bond", or "certified check", as the case may be) in an amount equal to at least 5% of the total amount of the bid, payable to the City of North Port. Cashier's checks will be returned to all bidders after award of bid. If supplying a bid bond please use the attached bid bond form.

The undersigned deposits the above-named security as a proposal guarantee and agrees that it shall be forfeited to the City as liquidated damages in case this proposal is accepted by the City and the undersigned fails to execute a contract with the City as specified in the contract documents accompanied by the required labor and material and faithful performance bonds with sureties satisfactory to the City, and accompanied by the required certificates of insurance coverage. Should the City be required to engage the services of an attorney in connection with the enforcement of this bid, bidder promises to pay City's reasonable attorneys' fees incurred with or without suit.

The undersigned agrees, if awarded this bid, to furnish a Performance and Payment Bond in the amount of 100% of the total project price within ten (10) calendar days after notification of award to the Purchasing Department. The undersigned shall be responsible and bear all costs associated to record Performance and Payment Bond with Sarasota County Clerk's Office. Receipt of said recording and a certified copy of the Bond shall be furnished to the Purchasing Division at the time of the pre-construction meeting.

All contract documents (i.e.; performance and payment bond, cashier's check, bid bond) shall be in the name of "City of North Port".

Date:_____

Signed (*Person authorized to bind the company*): _____

Name (printed):_____ **Title:**_____

(***THIS PAGE MUST BE COMPLETED AND SUBMITTED***)

BID SCHEDULE - SUMMARY OF PAYITEMS

It is understood that the estimated summary of pay item quantities are approximate only and are solely for the purpose of facilitating the comparison of bids, and that the Contractor's compensation shall be computed upon the basis of the actual quantities in the completed work, whether they be more or less than those shown.

Preparation of Bid Schedules: Contractor MUST use the City provided bid schedule below or the provided excel spreadsheet, if provided with the solicitation. **DO NOT RECREATE THIS FORM.** All blank spaces in the Bid Form must be filled in legibly. ***Bidder should not reference the words "No Charge, N/A, included, dash, etc." in any of the blocks. Bidder must identify a monetary amount for each UNIT COST and EXTENDED COST (unless the unit price is "x" out by the City). UNIT COST prevails over EXTENDED COST. Failure to identify a monetary amount in any of the UNIT COST line items shall cause bidder to be deemed non-responsive and bid response be rejected.*** In case of discrepancy between unit price and extended price, the unit price will govern. Apparent errors in extension will be corrected.

ITEM	DESCRIPTION	QUANTITY	UNIT	UNIT PRICE	COST
5	14" HDPE DR-11 Water Main (Subaqueous HDD) STA 15 + 15 TO STA 10 + 58 w HDPE Adapter/Reducer	430	LF		
6	12" PVC Potable Water Main, DR-18 (Open Cut)	60	LF		
7	12" Potable Water 45° Bends, MJ	4	EA		
8	12" Gate Valves, MJ, With Valve Boxes	2	EA		
9	12" TIE INS TO EXISTING AC WM's w Thrust Blocks	2	EA		
10	1" Potable ARV Assy	2	EA		
11	Potable Service Connections, Residential (1" Re-connections to Existing Meters)	1	EA		
12	Abandon In Place With Flowable Fill 12" AC Potable Water Mains (320 LF)	10	CY		
13	Remove the existing steel pipe (100LF) and hardware. Cut flush with abutment and mortar	1	LS		
14	Concrete Sidewalk Restoration (4" Thick)	5	SY		
15	Sodding	24	SY		
	SUB TOTAL ITEMS 5 - 15				
1	Mobilization (Maximum 6% of Total Base Bid)	1	LS		
2	Maintenance of Traffic	1	LS		
3	Field Layout and Record Drawings	1	LS		
4	Closeout	1	LS		

	TOTAL COST ESTIMATE				

Date:_____

Signed (P*erson authorized to bind the company*): _____

Name (printed):_____ **Title:**_____

(***THIS PAGE MUST BE COMPLETED AND SUBMITTED***)

EQUIPMENT AND SUBCONTRACTOR/SUPPLIER LIST

Equipment is located at: _____

The following is a listing of your equipment, inclusive of manufacturer, year and condition. List the condition of equipment/vehicles utilized for this project in accordance with the following scale: **1-Excellent**; **2-Good**; **3-Fair**; **4-Poor**. (Attach additional sheets, if required.)

Description	Manufacturer	Year	Condition	Leased/Owned (If leased, date of expiration)

SOURCE OF SUPPLY AND SUBCONTRACTOR FORM

The following sources of supply and subcontractors shall be used for the RFB NO. **CRANBERRY BRIDGE CROSSING WATER MAIN REPLACEMENT.** If bidder does not have a source of supply or subcontractor, insert "to be determined". When a source or subcontractor is determined, selection will be subject to City approval. (If not applicable, state N/A).

SUBCONTRACTOR(S)
(PLEASE INCLUDE ADDRESS/TELEPHONE NUMBER & E-MAIL)

1. _____

2. _____

3. _____

4. _____

SUPPLIER(S)

1. _____

2. _____

3. _____

4. _____

Date:_____

Signed (*Person authorized to bind the company*): _____

Name (printed):_____ **Title:**_____

(*THIS PAGE MUST BE COMPLETED AND SUBMITTED*)

QUALIFICATIONS AND REFERENCES

The Bidder (Company) **shall** have been in Commercial Construction Business with experience in projects involving water main installation, connections to existing water mains, and all associated testing, miscellaneous work, restoration, and clean-up. **Bidder shall demonstrate successful completion of a minimum of four (3) projects completed within the past five (5) years of similar size and scope to the CRANBERRY BRIDGE CROSSING WATER MAIN REPLACEMENT**.

1. Business/Customer Name:_____

Name of Contact Person/Title: _____

Telephone# _____Fax_____E-mail_____

Address_____

Phone Number_____

Duration of Contract or business relationship_____

Type of Services Provided_____

Contract Period: FROM _____ TO_____

Contract Price $_____ Contract Price at Completion of the Project $_____

2. Business/Customer Name:_____

Name of Contact Person/Title: _____

Telephone# _____Fax_____E-mail_____

Address_____

Phone Number_____

Duration of Contract or business relationship_____

Type of Services Provided_____

Date:_____

Signed (*Person authorized to bind the company*): _____

Name (printed):_____ **Title:**_____

(*THIS PAGE MUST BE COMPLETED AND SUBMITTED*)

3. Business/Customer Name:_____

Name of Contact Person/Title: _____

Telephone# _____Fax_____E-mail_____

Address_____

Contract Period: FROM _____ TO_____

Contract Price $_____ Contract Price at Completion of the Project $_____

Phone Number_____

Duration of Contract or business relationship_____

Type of Services Provided_____

Contract Period: FROM _____ TO_____

Contract Price $_____ Contract Price at Completion of the Project $_____

4. Business/Customer Name:_____

Name of Contact Person/Title: _____

Telephone# _____Fax_____E-mail_____

Address_____

Phone Number_____

Duration of Contract or business relationship_____

Type of Services Provided_____

Contract Period: FROM _____ TO_____

Contract Price $_____ Contract Price at Completion of the Project $_____

Date:_____

Signed (*Person authorized to bind the company*): _____
Name (printed):_____ **Title:**_____

(***THIS PAGE MUST BE COMPLETED AND SUBMITTED***)

STATEMENT OF ORGANIZATION

The following information will be provided to the City of North Port for incorporation in legal documents. It is; therefore, vital all information is accurate and complete. Please be certain all spelling, and capitalization is exactly as registered with the state or federal government.

Company Name_____

_____

Telephone # **E-Mail** **Fax #**

_____

Main Office Address

_____

City **State** **Zip Code**

Address of Office Servicing City of North Port, if different than above: ☐ ***SAME AS ABOVE***

_____

Office Address

_____

City **State** **Zip Code**

_____

Telephone # **E-mail** **Fax #**

_____

Name & Title of Firm Representative

Federal Identification Number: _____

Bidder shall submit proof that it is authorized to do business in the State of Florida unless registration is not required by law.

(Please Check One)

Is this a Florida Corporation: ☐Yes or ☐No

If not a Florida Corporation,

In what state was it created: _____

Name as spelled in that State: _____

What kind of corporation is it: ☐"For Profit" or ☐"Not for Profit"

Is it in good standing: ☐Yes or ☐No

(***THIS PAGE MUST BE COMPLETED AND SUBMITTED***)

Authorized to transact business in Florida: ☐Yes or ☐No

State of Florida Department of State Certificate of Authority Document No.:_____

Does it use a registered fictitious name: ☐Yes or ☐No

Names of Officers:

President:_____**Secretary:**_____
Vice President:_____**Treasurer:**_____
Director:_____**Director:**_____
Other:_____**Other:**_____

Name of Corporation (As used in Florida):

_____

(Spelled exactly as it is registered with the state or federal government)

Corporate Address:

Post Office Box: _____
City, State Zip: _____
Street Address: _____
City, State, Zip: _____

STATE OF _____

COUNTY OF _____

Sworn to and subscribed before me this____ day of _____, 20___, by _____ who ☐ is personally known to me or ☐ has produced his/her driver's license as identification.

_____
Notary Public - State of Florida
Print Name: _____
Commission No: _____

Date:_____

Signed (*Person authorized to bind the company*): _____

Name (printed):_____ **Title:**_____

(***THIS PAGE MUST BE COMPLETED AND SUBMITTED***)

NON-COLLUSIVE AFFIDAVIT

State of _____

County of _____ } SS.

Before me, the undersigned authority, personally appeared:
_____ who, being first duly sworn, deposes and says that:

1. He/She is the _____ (Owner, Partner, Officer, Representative or Agent) of _____, the Respondent that has submitted the attached reply;

2. He/She is fully informed respecting the preparation and contents of the attached reply and of all pertinent circumstances respecting such reply;

3. Such reply is genuine and is not a collusive or sham reply;

4. Neither the said Respondent nor any of its officers, partners, owners, agents, representatives, employees or parties in interest, including this affiant, have in any way colluded, conspired, connived or agreed, directly or indirectly, with any other respondent, firm, or person to submit a collusive or sham reply in connection with the work for which the attached reply has been submitted; or have in any manner, directly or indirectly sought by agreement or collusion, or communication or conference with any respondent, firm, or person to fix the price or prices in the attached reply or of any other respondent, or to fix any overhead, profit, or cost elements of the reply price or the reply price of any other respondent, or to secure through any collusion, conspiracy, connivance, or unlawful agreement any advantage against (Recipient), or any person interested in the reply work.

Signed, sealed and delivered this _____day of_____, 20_____.

By: _____

_____
(Printed Name)

_____
(Title)

STATE OF _____
COUNTY OF _____

Sworn to and subscribed before me this____ day of _____, 20___, by _____who ☐ is personally known to me or ☐ has produced his/her driver's license as identification.

_____
Notary Public - State of Florida
Print Name: _____
Commission No: _____

NOTARY SEAL:

(***THIS PAGE MUST BE COMPLETED AND SUBMITTED***)

CONFLICT OF INTEREST FORM

F.S. §112.313 places limitations on public officers (including advisory board members) and employees' ability to contract with the City either directly or indirectly. Therefore, please indicate if the following applies:

PART I.

☐ I am an employee, public officer or advisory board member of the City
_____**(List Position Or Board)**

☐ I am the spouse or child of an employee, public officer or advisory board member of the City
Name: _____

☐ An employee, public officer or advisory board member of the City, or their spouse or child, is an officer, partner, director, or proprietor of Respondent or has a material interest in Respondent. "Material interest" means direct or indirect ownership of more than 5 percent of the total assets or capital stock of any business entity. For the purposes of [§112.313], indirect ownership does not include ownership by a spouse or minor child.
Name: _____

☐ Respondent employs or contracts with an employee, public officer or advisory board member of the City
Name: _____

☐ None of The Above

PART II:

Are you going to request an advisory board member waiver?

☐ I will request an advisory board member waiver under §112.313(12)

☐ I will NOT request an advisory board member waiver under §112.313(12)

☐ N/A

The City shall review any relationships which may be prohibited under the Florida Ethics Code and will disqualify any bidders whose conflicts are not waived or exempt.

Date:_____

Signed (P*erson authorized to bind the company*): _____

Name (printed):_____ **Title:**_____

This page to be returned only if Contractor is claiming a North Port Local Business Status
(***THIS PAGE MUST BE COMPLETED AND SUBMITTED***)

PUBLIC ENTITY CRIME INFORMATION

As provided by F.S. §287.133, a person or affiliate who has been placed on the convicted vendor list following a conviction for a public entity crime may not submit a bid on a contract to provide any goods or services to a public entity, may not submit a bid on a contract with a public entity for the construction or repair of a public building or public work, may not submit bids on leases of real property to a public entity, may not be awarded or perform work as a Contractor, supplier, Subcontractor, or Consultant under a contract with any public entity, and may not transact business with any public entity in excess of the threshold amount provided in Section 287, for CATEGORY TWO for a period of 36 months from the date of being placed on the convicted vendor list.

I, _____, being an authorized representative of the Respondent _____ ,

Located at: _____

City: _____ State: _____ Zip Code: _____, have read and understand the contents above. I further certify that Respondent is not disqualified from replying to this solicitation because of F.S. §287.133.

Signature: _____ Date: _____

Telephone #: _____ Fax #: _____

Federal ID #: _____ E-mail:_____

State of _____

County of _____

Sworn to and subscribed before me this_____ day of _____, 20___, by _____who ☐ is personally known to me or ☐ has produced his driver's license as identification.

NOTARY SEAL:

_____

Notary Public - State of Florida

Print Name: _____

Commission No: _____

Date:_____

Signed (*Person authorized to bind the company*): _____

Name (printed):_____ **Title:**_____

(***THIS PAGE MUST BE COMPLETED AND SUBMITTED***)

DRUG FREE WORKPLACE FORM

The undersigned Respondent in accordance with Florida Statute §287.087 hereby certifies that _____does:
(Company Name)

1. Publish a statement notifying employees that the unlawful manufacture, distribution, dispensing, possession, or use of a controlled substance is prohibited in the workplace and specifying the actions that will be taken against employees for violations of such prohibition.

2. Inform employees about the dangers of drug abuse in the workplace, the business's policy of maintaining a drug free workplace, any available drug counseling, rehabilitation, and employee assistance programs, and the penalties that may be imposed upon employees for drug abuse violations.

3. Give each employee engaged in providing the commodities or contractual services that are under bid a copy of the statement specified in subsection (1).

4. In the statement specified in subsection (1), notify the employees that, as a condition of working on the commodities or contractual services that are under bid, the employee will abide by the terms of the statement and will notify the employer of any conviction of, or plea of guilty or nolo contendere to, any violation of Chapter 893 or of any controlled substance law of the United States or any state, for a violation occurring in the workplace no later than five (5) days after such conviction.

5. Impose a sanction on, or require the satisfactory participation in a drug abuse assistance or rehabilitation program if such is available in the employee's community, by any employee who is so convicted.

6. Make a good faith effort to continue to maintain a drug free workplace through implementation of this section.

As the person authorized to sign the statement, I certify that Respondent complies fully with the above requirements.

Check one:

☐ As the person authorized to sign this statement, I certify that this firm complies fully with above requirements.

☐ As the person authorized to sign this statement, this firm **does not** comply fully with the above requirements.

_____
Signature

_____
Print Name

_____
Date

(***THIS PAGE MUST BE COMPLETED AND SUBMITTED***)

AFFIDAVIT
Claiming Status as a LOCAL BUSINESS

****CONTRACTOR MUST MEET ALL 4 REQUIREMENTS BELOW TO CLAIM LOCAL BUSINESS STATUS****

State of _____
County of _____ } SS.

Before me, the undersigned authority, personally appeared:

_____

who, being first duly sworn, deposes and says that:

1. I am the _____ (Owner, Partner, Officer, Representative or Agent) of_ _____, the Bidder that has submitted the attached proposal;

AND

2. I am fully informed respecting the operation and employees of the Bidder;

AND

3. I affirm that the Bidder has maintained a physical business address located within the limits of Sarasota County, Charlotte County or Desoto County for a period of six (6) months or more before submitting this bid, from which the Bidder operates or performs business. The qualifying local address is_____
_____
_____
_____

AND

4. I affirm that at least fifty percent (50%) of the Bidder's employees are residents of the City of North Port. If requested by the City, the bidder will be required to provide documentation substantiating the information given in this affidavit. City of North Port reserves the right to request supporting documentation as evidence to substantiate the information given in this affidavit. Failure to do so will result in the bidder's submission being deemed non-responsive.

Any bidder that misrepresents its status as a local business or North Port local business shall be barred from receiving any City contracts for a period of three (3) years.

State of Florida
County of _____

Sworn to and subscribed before me this_____ day of _____, 20___, by _____who ☐ is personally known to me or ☐ has produced his driver's license as identification.

NOTARY SEAL:

_____
Notary Public - State of Florida
Print Name: _____
Commission No: _____

This page to be returned ONLY if Contractor is claiming a Local Business Status.
~~(~~***THIS PAGE MUST BE COMPLETED AND SUBMITTED***~~)~~

AFFIDAVIT
Claiming Status as a North Port Local Business

****CONTRACTOR MUST MEET ALL 4 REQUIREMENTS BELOW TO CLAIM NORTH PORT BUSINESS STATUS****

State of _____
County of _____ } SS.

Before me, the undersigned authority, personally appeared:

_____

who, being first duly sworn, deposes and says that:

1. I am the _____ (Owner, Partner, Officer, Representative or Agent) of _____, the Bidder that has submitted the attached bid;

AND

2. I am fully informed respecting the operation and employees of the Bidder;

AND

3. I affirm that the Bidder has maintained its primary physical business address within the limits of the City of North Port for a period of six (6) months or more before submitting this bid, from which the Bidder operates or performs business. The qualifying local address is

_____
_____
_____

AND

4. I affirm that at least fifty percent (50%) of the Bidder's employees are residents of the City of North Port.

If requested by the City, the bidder will be required to provide documentation substantiating the information given in this affidavit. City of North Port reserves the right to request supporting documentation as evidence to substantiate the information given in this affidavit. Failure to do so will result in the bidder's submission being deemed non-responsive.

Any bidder that misrepresents its status as a local business or North Port local business shall be barred from receiving any City contracts for a period of three (3) years.

State of Florida
County of _____

Sworn to and subscribed before me this_____ day of _____, 20___, by _____who ☐ is personally known to me or ☐ has produced his driver's license as identification.

NOTARY SEAL:

_____

Notary Public - State of Florida

Print Name: _____

Commission No: _____

This page to be returned ONLY if Contractor is claiming a North Port Local Business Status.
(*THIS PAGE MUST BE COMPLETED AND SUBMITTED*)

SWORN STATEMENT: THE FLORIDA TRENCH SAFETY ACT

(Complete if applicable)

THIS FORM MUST BE SIGNED IN THE PRESENCE OF A NOTARY PUBLIC BY AN OFFICER AUTHORIZED TO ADMINISTER OATHS.

1. This Sworn Statement is submitted with Bid No. _____ for the construction of _____
_____

2. This Sworn Statement is submitted by _____ whose business address is _____ and (if applicable) its Federal Employer Identification Number (FEIN) is _____.

3. My name is _____
(PRINTED OR TYPED NAME OF INDIVIDUAL SIGNING) and hold the position of _____ with the above entity.

4. The Trench Safety Standards that will be in effect during the construction of this Project are Florida Statute Section 553.60-55.64, Trench Safety Act, and OSHA Standard.

5. The undersigned assures that the entity will comply with the applicable Trench Safety Standards and agrees to indemnify and hold harmless the County and ENGINEER, and any of their agents or employees from any claims arising from the failure to comply with said standard.

6. The undersigned has appropriated $_____ per linear foot of trench to be excavated over 5' deep for compliance with the applicable standards and intends to comply by instituting the following procedures:____

7. The undersigned has appropriated $_____ per square foot for compliance with shoring safety requirements and intends to comply by instituting the following procedures:
_____

8. The undersigned, in submitting this Bid, represents that he or she has reviewed and considered all available geotechnical information and made such other investigations and tests as he or she may deem necessary to adequately design the trench safety system(s) he or she will utilize on this Project.

_____
Authorized Signature/Title

Sworn to and subscribed before me

this _____ _____
(date) Notary Public Signature

(Notary Seal)

My Commission Expires: _____

(***THIS PAGE MUST BE COMPLETED AND SUBMITTED***)

Scrutinized Company Certification Form

Company Name: _____

Authorized Representative Name and Title: _____

Address: _____ City: _____ State:_____ ZIP: _____

Phone Number:_____ Email Address:_____

A company is ineligible to, and may not, bid on, submit a proposal for, or enter into or renew a contract with the City of North Port for goods or services of any amount if, at the time of bidding on, submitting a proposal for, or entering into or renewing such contract, the company is on the Scrutinized Companies that Boycott Israel List, created pursuant to Florida Statutes, section 215.4725, or is engaged in a boycott of Israel.

A company is ineligible to, and may not, bid on, submit a proposal for, or enter into or renew a contract with the City of North Port for goods or services of $1 million or more if, at the time of bidding on, submitting a proposal for, or entering into or renewing such contract, the company is on the Scrutinized Companies with Activities in Sudan List, the Scrutinized Companies with Activities in the Iran Petroleum Energy Sector List, created pursuant to Florida Statutes, section 215.473, or with companies engaged in business operations in Cuba or Syria.

CHOOSE ONE OF THE FOLLOWING

☐ This bid, proposal, contract or contract renewal is for goods or services of less than $1 million. As the person authorized to sign on behalf of the above-named company, and as required by Florida Statutes, section 287.135(5), I hereby certify that the above-named company is not participating in a boycott of Israel.

☐ This bid, proposal, contract or contract renewal is for goods or services of $1 million or more. As the person authorized to sign on behalf of the above-named company, and as required by Florida Statutes, section 287.135(5), I hereby certify that the above-named company is not participating in a boycott of Israel, is not on the Scrutinized Companies with Activities in Sudan List or the Scrutinized Companies with Activities in the Iran Petroleum Energy Sector List, and it does not have business operations in Cuba or Syria.

I understand that pursuant to Florida Statutes, section 287.135, the submission of a false certification may result in the termination of the contract if one is entered into, and may subject the above-named company to civil penalties, attorney's fees and costs.

Certified By: _____
AUTHORIZED REPRESENTATIVE SIGNATURE

Print Name and Title: _____

Date Certified: _____

State of _____
County of _____

The foregoing instrument was acknowledged before me this ____ day of _____, 20__ by _____ who is personally known to me or who has produced _____ as identification.

_____
Notary Public

Solicitation/Contract/PO Number (Completed by Purchasing): _____

(***THIS PAGE MUST BE COMPLETED AND SUBMITTED***)

LOBBYING CERTIFICATION

"The undersigned hereby certifies, to the best of his or her knowledge and belief, that":

STATE OF _____

COUNTY OF _____

This_____ day_____of 2018_____, being first duly sworn, deposes and says that he or she is the authorized representative of _____(Name of the contractor, firm or individual), and that the vendor and any of its agents agree to have no contact or communication with, or discuss any matter related in any way to any active City of North Port solicitation, with any City of North Port elected officials, officers, their appointees or their agents or any other staff or outside individuals working with the city in respect to this request other than the designated Procurement Official Contact and to abide by the restrictions outlined in the General Terms and Conditions of the Solicitation. Technical questions directed to the project manager, is prohibited. These persons shall not be lobbied, either individually or collectively, regarding any questions for bid, proposal, qualification and/or any other solicitations released by the city. To do so is grounds for immediate disqualification from the selection process. The selection process is not considered final until such a tome as the Commission has made a final and conclusive determination.

(a) No City appropriated funds have been paid or will be paid, by or on behalf of the undersigned, to any person for influencing or attempting to influence either directly or indirectly an officer or employee of the City, City Commission in connection with the awarding of any City Contract.

(b) If any funds other than City appropriated funds have been paid or will be paid to any person for influencing or attempting to influence a member of City Commission or an officer or employee of the City in connection with this contract, the undersigned shall complete and submit Standard Form-L "Disclosure Form to Report Lobbying", in accordance with its instructions.

Signed, sealed and delivered this _____day of_____, 2018.

By: _____

_____
(Printed Name)

_____
(Title)

STATE OF _____

COUNTY OF _____

Sworn to and subscribed before me this____ day of _____, 2018, by _____who ☐ is personally known to me or ☐ has produced his/her driver's license as identification.

_____

Notary Public - State of _____
Print Name: _____
Commission No: _____

(***THIS PAGE MUST BE COMPLETED AND SUBMITTED***)

SWORN STATEMENT: THE FLORIDA TRENCH SAFETY ACT

(Complete if applicable)

THIS FORM MUST BE SIGNED IN THE PRESENCE OF A NOTARY PUBLIC BY AN OFFICER AUTHORIZED TO ADMINISTER OATHS.

2. This Sworn Statement is submitted with Bid No. _____ for the construction of _____
_____

2. This Sworn Statement is submitted by _____ whose business address is _____ and (if applicable) its Federal Employer Identification Number (FEIN) is _____.

3. My name is _____
(PRINTED OR TYPED NAME OF INDIVIDUAL SIGNING) and hold the position of _____ with the above entity.

4. The Trench Safety Standards that will be in effect during the construction of this Project are Florida Statute Section 553.60-55.64, Trench Safety Act, and OSHA Standard.

5. The undersigned assures that the entity will comply with the applicable Trench Safety Standards and agrees to indemnify and hold harmless the City and ENGINEER, and any of their agents or employees from any claims arising from the failure to comply with said standard.

6. The undersigned has appropriated $_____ per linear foot of trench to be excavated over 5' deep for compliance with the applicable standards and intends to comply by instituting the following procedures:____

7. The undersigned has appropriated $_____ per square foot for compliance with shoring safety requirements and intends to comply by instituting the following procedures:
_____

8. The undersigned, in submitting this Bid, represents that he or she has reviewed and considered all available geotechnical information and made such other investigations and tests as he or she may deem necessary to adequately design the trench safety system(s) he or she will utilize on this Project.

_____
Authorized Signature/Title

Sworn to and subscribed before me

this _____ _____
(date) Notary Public Signature

(Notary Seal)

My Commission Expires: _____

CITY OF NORTH PORT

BID BOND

In Compliance with F.S. Chapter 255.051

STATE OF FLORIDA, CITY OF NORTH PORT

KNOW ALL BY THESE PRESENTS, that _____, authorized by law to do business as a _____ contractor in the State of Florida, as Principal, and _____, a Corporation chartered and existing under the laws of the State of _____, as Surety, with its principal offices in the City of _____, and authorized to do business in the State of Florida, and in accordance with Section 255.051, Florida Statues, are held and firmly bound unto the City of North Port, Florida, in the full and just sum of 5% of the Total Bid Price, in good and lawful money of the United States of America, to be paid upon demand by the City of North Port, to which payment well and truly to be made, we bind ourselves, our heirs, executors, administrators, and assigns, joint and severally and firmly by these presents.

The condition of the obligation is such, that whereas the Principal has submitted the attached Bid, dated _____, for (_____CRANBERRY BRIDGE CROSSING WATER MAIN REPLACEMENT, RFB 2019-40 _____).

NOW, THEREFORE, if the Principal shall withdraw said bid prior to the date of opening the same, or shall within 10 days after the prescribed forms are presented to him for signature enter into a written Contract with City of North Port, Florida, in accordance with the bid as accepted and give a Performance and Payment Bond with good and sufficient surety or sureties as may be required for the faithful performance and proper fulfillment of such Contract and for the prompt payment of all persons furnishing labor or materials in connection therewith or, in the event of failure to enter into such Contract and give such bond within the time specified, if the Principal shall pay the City the difference between the amount specified in said bid and the amount for which the City may procure the required work and/or supplies provided the latter amount to be excess of the amount specified in said bid, then the above obligations shall be void; otherwise, to remain in full force and effect.

IN THE WITNESS WHEREOF, the above written parties have executed this instrument under their several seals dated _____, the name and corporate seal of each corporate party being hereto affixed and these presents duly signed by its undersigned representative, pursuant to authority of its governing body.

Witness as to Principal: _____(SEAL)

_____ (Principal)

(By)

_____

Witness as to Surety: Printed Name

_____ _____(SEAL)

(Surety's Name)

_____

(By-As Attorney-in-Fact, Surety)

Affix Corporate Seals and attach proper Power of Attorney for Surety.

CITY OF NORTH PORT

PERFORMANCE AND PAYMENT BOND
In compliance with F.S. Chapter 255.05(10(a) and Code of the City of North Port Sec. 2-414

BOND NO.: _____
BOND AMOUNT: $ _____

CONTRACTOR NAME: _____
PRINCIPAL ADDRESS: _____
PRINCIPAL PHONE NO.: _____

SURETY COMPANY NAME: _____
SURETY AGENT: _____
PRINCIPAL ADDRESS: _____
PRINCIPAL PHONE NO.: _____

CITY NAME: City of North Port, Florida
PRINCIPAL ADDRESS: 4970 City Hall Boulevard
North Port, Florida 34286
CITY CONTACT PHONE NO.: (941) _____

CONTRACT NO.: (if applicable) _____
PROJECT ADDRESS:
(if applicable) _____

DESCRIPTION OF PROJECT:
(if applicable) _____

DESCRIPTION OF IMPROVEMENT: _____

By this Bond, we, _____, as Principal, hereinafter called Contractor, and _____, a corporation organized and existing under the laws of the State of _____, with its principal office in the City of _____, as Surety, hereinafter called Surety, are held firmly bound unto the City of North Port, Florida, as Obligee, hereinafter called City, in the amount of _____Dollars ($_____), for the payment whereof Contractor and Surety bind themselves, their heirs, executors, administrators, personal representatives, successors, and assigns, jointly and severally, firmly by these presents.

WHEREAS, Contractor has by written agreement dated _____, entered into a contract with City for _____

_____

In accordance with drawings and specifications prepared by _____

_____

Which contract is by reference made a part hereof, and is hereinafter referred to as the CONTRACT.

NOW, THEREFORE, THE CONDITION OF THIS BOND is such that if Contractor:

1. Performs the Contract dated _____, between Contractor and City for construction of **CRANBERRY BRIDGE CROSSING WATER MAIN REPLACEMENT, RFB 2019-40,** the Contract being made a part of this bond by reference, at the times and in the manner prescribed in the Contract; and

2. Promptly makes payments to all claimants, as defined in Section 255.05(1), Florida Statutes, supplying Contractor with labor, materials, or supplies, used directly or indirectly by Contractor in the prosecution of the work provided for in the Contract; and

3. Pays City all losses, damages, expenses, costs, and attorney's fees, including appellate proceedings, that City sustains because of a default by Contractor under the Contract; and

4. Performs the guarantee of all work and materials furnished under the Contract for the time specified in the Contract, then this bond is void; otherwise it remains in full force.

Any action instituted by City under this bond for payment must be in accordance with the notice and time limitation provisions in Section 255.05(2), Florida Statutes.

Any changes in or under the Contract documents and compliance or noncompliance with any formalities connected with the Contract or the changes does not affect Surety's obligation under this bond.

In witness whereof, the said Contractor and Surety have signed and sealed this instrument

this

_____
(date)

_____
Principal

By:

_____
As President

(SEAL)

_____
Surety

By:

_____

Any Claims under this bond may be addressed to
(name and address of Surety):

_____

_____

_____

Telephone No:_____

Name and address of agent or representative in Florida if different from above:

_____

_____

_____

Telephone No:_____

"SAMPLE"

CONTRACT (SUBJECT TO CHANGE)

This Contract ("Contract") is made this _____ day of _____, **2018**, by and between the **CITY OF NORTH PORT**, a municipal corporation of the State of Florida, hereinafter referred to as the "City" and XXXXXXX**,** a Florida limited liability company, ADDRESS, CITY, Florida ZIP CODE, hereinafter referred to as the "Contractor".

WITNESSETH

That the parties to this Contract, in consideration of their mutual agreements and promises hereinafter contained, bind themselves, their partners, successors, assigns and legal representatives to all covenants, agreements and obligations contained in the agreements and bid documents executed between the parties, and do hereby further agree as follows:

1. RESPONSIBILITIES OF THE CONTRACTOR:

A. Responsibility for and Supervision: The Contractor shall supervise and direct the work to the best of his/her ability, give it all the attention necessary for such proper supervision and direction and not employ for work on the project any person without sufficient skill to perform the job for which the person was employed.

The Contractor assumes full responsibility for acts, negligence, or omissions of all his/her employees on the project, for those subcontractors and their employees, and for those of all other persons doing work under a contract with him/her. All contracts between the Contractor and any such subcontractor as the Contractor shall hire, shall conform to the provisions of the Contract and bid documents and shall incorporate in them the relevant portions of this Contract.

B. **Furnishing of Labor and Materials:** The Contractor shall provide and pay for all labor, materials, and equipment, including tools, construction equipment and machinery, and all transportation and all other facilities and services necessary for the proper completion of the work in strict conformity with the provisions herein contained, and with the Request For Bid No. 2019-40, including the plans and specifications, addendums and with the proposal submitted by the Contractor and on file with the City. The foregoing Request For Bid (RFB), specifications, and proposal submitted by the Contractor, are hereby specifically made a part of this Contract and are incorporated herein.

The Contractor represents and warrants to the City that all equipment and materials used in the work, and made a part of the structures thereon, or placed permanently in connection therewith, will be new unless otherwise specified in the Contract and bid documents, of good quality, free of defects, and in conformity with the Contract and bid documents. It is understood between the parties thereto that all equipment and materials not in conformity are defective.

C. **Incorporation of Bid Documents:** The **Request For Bid No. 2019-40**, including the plans, specifications, and addendums, and Contractor's response to RFB, are specifically made a part of this Contract and are incorporated herein. In the event of a conflict between or among the documents or any ambiguity or missing specifications or instruction, the following priority is established:

1. First, this Contract (Contract No. 2019-40) Approved by Commission, and any attachments
2. Second, Request for Bid, including any and all attachments and addenda
3. Third, Contractor's response to this solicitation.
4. Fourth, specific direction from the City Manager

D. **Public Records Law:** In accordance with Florida Statutes 119.0701, Contractor shall comply with all public records laws, and shall specifically:

1. Keep and maintain public records required by the City to perform the service.

a. The timeframes and classifications for records retention requirements must be in accordance with the General Records Schedule GS1-SL for State and Local Government Agencies.
(See http://dos.dos.state.fl.us/library-archives/records-management/general-records-schedules/).

b. "Public records" means and includes those items specified in Florida Statutes 119.011(12), as amended from time to time, and currently defined as: All documents, papers, letters, maps, books, tapes, photographs, films, sound recordings, data processing software, or other material, regardless of the physical form, characteristics, or means of transmission, made or received pursuant to law or ordinance or in connection with the transaction of official business with the City. Contractor's records under this Agreement include but are not limited to, supplier/subcontractor invoices and contracts, project documents, meeting notes, e-mails and all other documentation generated during this Agreement.

2. Upon request from the City's custodian of public records, provide the City, at no cost, with a copy of the requested records or allow the records to be inspected or copied within a reasonable time at a cost that does not exceed the cost provided for by law. All records kept electronically must be provided to the City, upon request from the City's custodian of public records, in a format that is compatible with the information technology systems of the City.

3. Ensure that project records that are exempt or confidential and exempt from public records disclosure requirements are not disclosed except as authorized by law for the duration of the contract term and, if the Contractor does not transfer the records to City following completion of the contract, for the time period specified in General Records Schedule GS1-SL for State and Local Government Agencies.

4. Upon completion of the contract, transfer, at no cost, to the City all public records in Contractor's possession or keep and maintain public records required by the City to perform the service. If the Contractor transfers all public records to the City upon completion of the contract, the Contractor shall destroy any duplicate public records that are exempt or confidential and exempt from public records disclosure requirements. If the Contractor keeps and maintains public records upon the completion of the contract, the Contractor shall meet all applicable requirements for retaining public records.

5. **IF THE CONTRACTOR HAS QUESTIONS REGARDING THE APPLICATION OF CHAPTER 119, FLORIDA STATUTES, TO THE CONTRACTOR'S DUTY TO PROVIDE PUBLIC RECORDS RELATING TO THIS CONTRACT, CONTACT THE CUSTODIAN OF PUBLIC RECORDS AT CUSTODIAN OF PUBLIC RECORDS, 4970 CITY HALL BOULEVARD, NORTH PORT, FLORIDA 34286, 941.429.7063 OR HOTLINE 941.429.7270; E-MAIL: kpeto@cityofnorthport.com.**

6. Failure of the CONTRACTOR to comply with these requirements shall be a material breach of this Agreement. Further, Contractor may be subject to penalties under Florida Statutes 119.10.

2. CONTRACT PRICE:
In consideration of the foregoing services, work, labor and materials to be furnished by the contractor as per said plans, specifications and addendums, the City agrees to pay and the Contractor **$XXX**

The **CONTRACT PRICE Is XXXXXX-XXX ($XXXX).**

3. PAYMENT:

One (1) original requests for payment must be submitted to the City of North Port on a form approved by the City. Each pay request must be accompanied by an updated work schedule to reflect progress of work. Payment shall be accompanied by either written approval and direction of the surety, or receipt of updated affidavits of payment by subcontractors and/or suppliers, in accordance with F.S. §255.05(11). Price shall be net and all invoices payable according to the Florida Local Government Prompt Payment Act (F.S. ch. 218). Upon certification and approval by the City or its duly authorized agent, progress payments may be made to the Contractor upon its application for all services or work completed or materials furnished in accordance with the Contract. Prior to fifty percent (50%) completion, the Contractor will be paid monthly the total value of the work completed and accepted during the preceding month, less ten percent (10%) retainage. After fifty percent (50%) completion of the construction services purchased pursuant to the Contract, the City must reduce to five percent (5%) the amount of retainage withheld from each subsequent progress payment made to the Contractor upon request of the Contractor. For purposes of this subsection, the term "fifty percent (50%) completion" is the point at which the City has expended fifty percent (50%) of the total cost of the construction services purchased as identified in the Contract together with all costs associated with existing change orders and other additions or modifications to the construction services provided for in the Contract. The City shall inform the Contractor's Surety of any reduction in retainage. Contractor must update each new pay request in accordance with any changes made to the previous submittal. The City or its duly authorized administrative agent, shall approve final payment for all work, materials or services furnished under this Contract retainage may be reduced upon issuance of the Certificate of Substantial Completion by the City if, in the sole opinion of the City, sufficient progress on the schedule has been accomplished, all required affidavits have been provided, and the City has retained adequate coverage for the project through the achievement of Final Completion.

4. CONTRACT TIME:

The Contractor specifically agrees that it will commence operations within a mutually agreed upon time following notification by the City to commence work and that all work to be performed under the provisions of this Contract shall be completed in not more than **120 calendar days** from the notice to proceed; subject only to delays caused through no fault of the Contractor or acts of God. The work will be substantially completed within **90 calendar days**; with final completion within **30 calendar days** after attaining Substantial Completion. Time is of the essence in the performance of this Contract.

5. LIQUIDATED DAMAGES:

The work shall be completed within the Contract time specified. The Contract time shall include the preparation, submittal, review and approval of submittals, delivery of materials, and construction, assembly, adjustment and placement into service for beneficial use of all facilities covered under this Contract.

The City shall issue a Notice of Substantial Completion when it has determined that the work identified in the Contract has been substantially completed; record drawings have been submitted and approved by the City and that the facility is operating satisfactorily. The Contract time also includes up to fourteen (14) calendar days for the review of submittals, excluding pay requests, by the City. The City shall provide the Contractor a punch list within two (2) calendar days after the Notice of Substantial Completion is issued. The punch list will identify the remaining items that must be addressed to the satisfaction of the City by the Contractor to meet his/her obligations under the Contract. The Contractor shall complete the items on the punch list to the satisfaction of the City within twenty-eight (28) additional calendar days of the issuance of the Final Punch List or Notice of Substantial Completion, whichever is later,

and prior to submittal of the application for reduction of retainage or final payment. Any cost incurred by the City (i.e. inspection time) after the twenty-eight (28) calendar day period shall be charged to the Contractor.

The City and the Contractor hereby agree that time is of the essence on this Contract and the City will suffer damages if the work is not substantially completed within the Contract time, plus any extensions thereof allowed by Change Order. It is further recognized and agreed by the City and the Contractor that the determination of the exact value of the damages the City would suffer due to a delay in the Substantial Completion of the work would be a difficult, time consuming and costly process. It is therefore hereby agreed by the City and the Contractor that it is in their mutual interest to establish a figure of FOUR HUNDRED AND THREE DOLLARS **($403)** as Liquidated Damages (but not as a penalty) to be paid by the Contractor to the City for each calendar day that Substantial Completion is delayed beyond the Contract Time.

It is mutually agreed by the City and the Contractor that neither shall make any claim to increase or reduce the amount to be paid under Liquidated Damages as the result of any calculation of actual damages suffered by the City as the result of delay in the Substantial Completion of the work.

6. BOND REQUIREMENTS:

A. **Bond Requirements:** The successful bidder shall provide the required performance and payment bond or other acceptable security to the City within **ten (10) business days of being awarded the bid. Failure by the successful bidder to provide the bond within ten (10) business days shall be considered a default under Sec. 2-404 of the City of North Port Administrative Code.** Upon such default the City may immediately award the bid to the next lowest responsive and responsible bidder, and recover from the original successful bidder the difference in cost between the original winning bid and the next lowest responsive and responsible bidder. Such default shall only be curable at the option of the City.

In addition, the Contractor shall be responsible and bear all costs associated to record the Performance and Payment Bond with Sarasota County Clerk's Office. The Contractor shall furnish the receipt of said recording and certified copy of the bond to the Purchasing Department at the time of the pre-construction meeting. Such default shall only be curable at the option of the City.

B. **Performance and Payment Bond:** The Contractor shall provide a Performance and Payment Bond, in the form prescribed in Florida Statutes Section 255.05 in the amount of one hundred percent (100%) of the Contract amount, the costs of which are to be paid by the Contractor. The bond will be acceptable to the City only if the Surety Company:

1. Is licensed to do business in the State of Florida;

2. Holds a certificate of authority authorizing it to write surety bonds in this state;

3. Has twice the minimum surplus and capital required by the Florida Insurance Code at the time the invitation to bid is issued;

4. Is otherwise in compliance with the provisions of the Florida Insurance Code;

5. Holds a currently valid certificate of authority issued by the United States Department of Treasury under 31 U.S.C. §§ 9304-9308;

6. A current rating of at least Excellent (A or A-) as reported in the most current Best Key Rating Guide, published by A.M. Best Company, Inc., of 75 Fulton Street, New York, New York 10038; and

7. With an underwriting limitation of at least two times the dollar amount of the contract.

If the Surety Company for any bond furnished by the Contractor files for bankruptcy, has a receiver appointed, is declared bankrupt, becomes insolvent, has an assignment made for the benefit of creditors, has its right to do business terminated in the State of Florida, or ceases to meet the requirements imposed by the Contract Documents, the Contractor shall, within five (5) calendar days thereafter, substitute another Bond and Surety Company, both of which shall be subject to the City's approval.

By execution of this bond, the Surety Company acknowledges that it has read the surety qualifications and surety obligations imposed by the Contract documents and hereby satisfies those conditions.

By execution of this bond, the Surety Company acknowledges that it has read the surety qualifications and surety obligations imposed by the Contract documents and hereby satisfies those conditions.

7. INSURANCE:

Before performing any Contract work, the Contractor shall procure and maintain, during the life of this Contract, the following types of insurance coverage and shall furnish certificates representing such insurance to the City. The policies of insurance shall be primary and written on forms acceptable to the City and placed with insurance carriers approved and licensed by the Insurance Department in the State of Florida and meet a minimum financial AM Best and Company rating of no less than "A- Excellent: FSC VII." No changes are to be made to these specifications without prior written approval by the City Manager or designee. The City Manager or designee may alter the amounts or types of insurance policies required by this Contract upon agreement with Contractor.

A. WORKERS' COMPENSATION AND EMPLOYERS' LIABILITY INSURANCE (PER CHAPTER 440, FLORIDA STATUTES)*:* The Contractor shall procure and maintain during the life of this Contract Worker's Compensation insurance for all its employees to be engaged in work on the project under this Contract and, in case any such work is sublet, the Contractor shall require the subcontractor similarly to provide Worker's Compensation insurance for all of the latter's employees to be engaged in such work unless such employees are covered by protection afforded by the Contractor's Workers Compensation insurance. For additional information contact the Department of financial Services, Workers' Compensation Division at 850.413.1601 or on the web at www.fldfs.com. In case any class of employees engaged in hazardous work on the project under this Contract is not protected under the Worker's Compensation Statute, the Contractor shall provide, and shall cause each subcontractor to provide, Employer's Liability Insurance for the protection of such of its employees not otherwise protected under such provisions. The minimum liability limits of such insurance shall not be less than herein specified or in that amount specified by law for that type of damage claim.

Proof of such insurance shall be filed by the Contractor with the City within ten (10) days after the execution of this Contract. Coverage is to apply for all employees in the statutory limits in compliance with the applicable state and federal laws. The policy must include Employers' Liability with a limit of $1,000,000 for each accident; $1,000,000 each employee; and $1,000,000 policy limit for bodily injury or disease.

1. Policy shall contain a waiver of subrogation against the City of North Port, Florida.

2. Contractor's sub-contractors shall be subject to the same minimum requirements identified in this section.

3. If the Contractor has no employees, the Contractor must submit to the City the Workers Compensation Exemption from the State of Florida.

B. COMPREHENSIVE GENERAL LIABILITY – Occurrence Form (CG 00 01)*:* The Contractor shall procure and maintain and require all subcontractors to procure and maintain during the life of this Contract, a comprehensive general liability policy, including, but not limited to, bodily injury, property damage, broad form contractual liability and Explosion, Collapse and Underground (XCU) coverage. The general aggregate limit shall apply separately to this project/location or the general aggregate limit shall be twice the required occurrence limit.

Proof of the following insurance shall be filed by the Contractor with the City within ten (10) days after the execution of this Contract:

- General Aggregate $3,000,000.
- Each Occurrence $1,000,000.
- Products and completed ops $1,000,000.
- Damage to rented premises $100,000.
- Fire damage $100,000.

1. The policy shall be endorsed to include the following additional insured language: "City of North Port, Florida, and it commissioners, officers, employees, agents and volunteers shall be named as an additional insured with respect to liability arising out of the activities performed by, or on behalf of the Contractor."

2. Contractor's subcontractors shall be subject to the same minimum requirements identified above.

3. Policy shall be endorsed for a waiver of subrogation against the City of North Port, Florida.

C. BUSINESS AUTOMOBILE LIABILITY: The Contractor shall procure and maintain, and require all subcontractors to procure and maintain, during the life of this Contract, automobile liability insurance including all owned, hired, and non-owned automobiles. Bodily injury and property damage for any owned, hired, and non-owned vehicles used in the performance of this Contract. Automobile liability must be written on a standard ISO form (CA 00 01) covering any auto (Code 1), or if Contractor has no owned autos, hired (Code 8) and non-owned (Code 9) autos.

Proof of such insurance shall be filed by the Contractor with the City within ten (10) days after the execution of this Contract.

- Combined Single Limit (CSL) (Ea Accident) $1,000,000.
- Bodily Injury (per person) $1,000,000.
- Bodily Injury (per accident) $1,000,000.
- Property Damage (per accident) $1,000,000.

1. The policy shall be endorsed to include the following additional insured language: "City of North Port, Florida, and it commissioner, officers, employees, agents and volunteers shall be named as an additional insured with respect to liability arising out of the activities performed by, or on behalf of the Contractor, including automobiles owned, leased, hired or borrowed by the Contractor."

2. Contractor's sub-contractors shall be subject to the same minimum requirements identified in this section.
3. Policy shall contain a waiver of subrogation against the City of North Port, Florida.

D. ENVIRONMENTAL/POLLUTION LIABILITY: Not required unless chemicals are being used that are listed as hazardous on www.epa.gov website. In the event that hazardous chemicals are to be used, Contractor shall provide an Environmental/Pollution Liability policy in an amount:

- General Aggregate $3,000,000.
- Each Occurrence $1,000,000.

Contractor shall notify City prior to usage of hazardous chemicals so that adequate insurance coverage is provided prior to usage of such chemicals. Failure to so notify City shall be deemed a material breach of this Contract.

E. SPECIAL REQUIREMENTS: The City of North Port, Florida, is to be named additional insured on any Comprehensive Commercial General Liability Policy and Auto Policy. All certificates of insurance must be on file with and approved by the City before commencement of any work activities under this Contract.

Any and all deductibles to the above referenced policies are to be the responsibility of the Contractor. The Contractor's insurance is considered primary for any loss regardless of any insurance maintained by the City. The Contractor is responsible for all insurance policy premiums, deductibles, or SIR (self-insured retentions) or any loss or portion of any loss that is not covered by any available insurance policy.

All insurance policies must be issued by companies of recognized responsibility licensed to do business in the State of Florida and must contain a provision that prohibits cancellation unless the City is provided notice as stated within the policy. It is the Contractor's responsibility to provide notice to the City.

This must be written in the description of operations section of the insurance certificate, even if there is check-off- box on the insurance certificate. Any costs for adding the City as "additional insured" shall be at the Contractor's expense. All certificates of insurance must be on file with and approved by the City before commencement of any work activities under this Contract. The Certificate of Insurance must be accompanied by a copy of the additional insured endorsement (CG20101185 or combination of CG20100704 and GC20370704 will be accepted).

F. WAIVER OF SUBROGATION: All required insurance policies, with the exception of Workers Compensation, are to be endorsed with a Waiver of Subrogation. The insurance companies, by proper endorsement or thru other means, agrees to waive all rights of subrogation against the City, its commissioners, officers, officials, employees and volunteers, and the City's insurance carriers, for losses paid under the terms of these polices that arises from the contractual relationship or work performed by the Contractor for the City. It is the Contractor's responsibility to notify their insurance company of the Waiver of Subrogation and request written authorization or the proper endorsement. Additionally, the Contractor, its officers, officials, agents, employees, volunteers, and any subcontractors, agree to waive all rights of subrogation against the City and its insurance carriers for any losses paid, sustained or incurred, but not covered by insurance, that arise from the contractual relationship or work performed. This waiver also applies to any deductibles or self-insured retentions the Contractor or its agents may be responsible for.

G. POLICY FORM:

1. All policies, required by this Contract, with the exception of Workers Compensation, or unless specific approval is given by Risk Management through the City's Purchasing Office, are to be written on an occurrence basis, shall name the City of North Port, Florida, its Commissioners, officers, agents, employees and volunteers as additional insured as their interest may appear under this Contract. Insurer(s), with the exception of Professional Liability and Workers Compensation, shall agree to waive all rights of subrogation against the City of North Port, Florida, its Commissioners, officers, agents, employees, or volunteers.

2. Insurance requirements itemized in this Contract, and required of the Contractor, shall be provided by or on behalf of all subcontractors to cover their operations performed under this Contract. The Contractor shall be held responsible for any modifications, deviations, or omissions in these insurance requirements as they apply to subcontractors.

3. Each insurance policy required by this Contract shall:

a. Apply separately to each insured against whom claim is made and suit is brought, except with respect to limits of the insurer's liability.

b. Be endorsed to state that coverage shall not be suspended, voided or cancelled by either party except after notice is delivered in accordance with the policy provisions. The Contractor is to notify the City Purchasing Office by written notice via certified mail, return receipt requested.

4. The City shall retain the right to review, at any time, coverage, form, and amount of insurance.

5. The procuring of required policies of insurance shall not be construed to limit Contractor's liability nor to fulfill the indemnification provisions and requirements of this Contract. The extent of Contractor's liability for indemnity of the City shall not be limited by insurance coverage or lack thereof, or unreasonably delayed for any reason, including but not limited to, insurance coverage disputes between the Contractor and its carrier.

6. The Contractor shall be solely responsible for payment of all premiums for insurance contributing to the satisfaction of this Contract and shall be solely responsible for the payment of all deductibles and retention to which such policies are subject, whether or not the City is an insured under the policy.

7. Claims Made Policies will be accepted for professional and hazardous materials and such other risks as are authorized by the City's Purchasing Office. All Claims Made Policies contributing to the satisfaction of the insurance requirements herein shall have an extended reporting period option or automatic coverage of not less than two (2) years. If provided as an option, the Contractor agrees to purchase the extended reporting period on cancellation or termination unless a new policy is affected with a retroactive date, including at least the last policy year.

8. Certificates of Insurance evidencing Claims Made or Occurrences form coverage and conditions to this Contract, as well as the contract number and description of work, are to be furnished to the City's Purchasing Office (4970 City Hall Boulevard, Suite 337, North Port, FL 34286) prior to commencement of work AND a minimum of thirty (30) calendar days prior to expiration of the insurance contract when applicable. All insurance certificates shall be received by the City's Purchasing Office before the Contractor will be allowed to commence or continue work. The Certificate of Insurance issued by the underwriting department of the insurance carrier shall certify compliance with the insurance requirements provided herein.

8. INDEMNITY:

A. TO THE EXTENT PERMITTED BY FLORIDA LAW, THE CONTRACTOR SHALL INDEMNIFY, DEFEND, AND HOLD HARMLESS THE CITY, ITS COMMISSIONERS, OFFICERS, AGENTS AND EMPLOYEES, FROM ALL LIABILITIES, FINES, CLAIMS, ASSESSMENTS, SUITS, JUDGMENTS, DAMAGES, LOSSES AND COSTS, INCLUDING CONSEQUENTIAL, SPECIAL, INDIRECT, AND PUNITIVE DAMAGES, (INCLUDING, BUT NOT LIMITED TO, REASONABLE ATTORNEYS' FEES AND COURT COSTS, WHETHER SUCH FEES AND COSTS ARE INCURRED IN NEGOTIATIONS, AT THE TRIAL LEVEL OR ON APPEAL, OR IN THE COLLECTION OF ATTORNEYS' FEES), ARISING OUT OF ANY ACTS, ACTIONS, BREACHES, NEGLECT OR OMISSIONS OF THE CONTRACTOR, OR CONTRACTOR'S OFFICERS, EMPLOYEES, AGENTS, SUBCONTRACTORS, SUB-

CONSULTANTS, AND OTHER PERSONS EMPLOYED OR UTILIZED BY THE CONTRACTOR IN THE PERFORMANCE OF, OR THE FAILURE TO PERFORM, THE CONTRACT. THE CONTRACT DOES NOT CONSTITUTE A WAIVER OF SOVEREIGN IMMUNITY OR CONSENT BY THE CITY OR ITS SUBDIVISIONS TO SUIT BY THIRD PARTIES.

B. IN THE EVENT OF A CLAIM, THE CITY SHALL PROMPTLY NOTIFY THE CONTRACTOR IN WRITING BY PREPAID CERTIFIED MAIL (RETURN RECEIPT REQUESTED) OR BY DELIVERY THROUGH ANY NATIONALLY RECOGNIZED COURIER SERVICE (SUCH AS FEDERAL EXPRESS OR UPS) WHICH PROVIDES EVIDENCE OF DELIVERY, AT THE ADDRESS PROVIDED FOR RECEIPT OF NOTICES IN THIS CONTRACT.

C. THE CITY SHALL PROVIDE ALL AVAILABLE INFORMATION AND ASSISTANCE THAT THE CONTRACTOR MAY REASONABLY REQUIRE REGARDING ANY CLAIM. THIS AGREEMENT FOR INDEMNIFICATION SHALL SURVIVE TERMINATION OR COMPLETION OF THE CONTRACT. THE INSURANCE COVERAGE AND LIMITS REQUIRED IN THIS CONTRACT MAY OR MAY NOT BE ADEQUATE TO PROTECT THE CITY AND SUCH INSURANCE COVERAGE SHALL NOT BE DEEMED A LIMITATION ON THE CONTRACTOR'S LIABILITY UNDER THE INDEMNITY PROVIDED IN THIS SECTION. IN ANY PROCEEDINGS BETWEEN THE PARTIES ARISING OUT OF OR RELATED TO THIS INDEMNITY PROVISION, THE PREVAILING PARTY SHALL BE REIMBURSED ALL COSTS, EXPENSES AND REASONABLE ATTORNEY FEES THROUGH ALL PROCEEDINGS (AT BOTH TRIAL AND APPELLATE LEVELS).

D. NOTHING IN THIS CONTRACT SHALL BE DEEMED TO AFFECT THE RIGHTS, PRIVILEGES AND IMMUNITIES OF THE CITY AS SET FORTH IN FLORIDA STATUTES, SECTION 768.28.

E. THE TERMS OF THIS SECTION SHALL SURVIVE THE TERMINATION OF THIS CONTRACT.

F. FURTHER, THE CONTRACTOR SHALL FULLY INDEMNIFY, DEFEND, AND HOLD HARMLESS THE CITY OF NORTH PORT, FLORIDA, FROM ANY SUITS, ACTIONS, DAMAGES, AND COSTS OF EVERY NAME AND DESCRIPTION, INCLUDING ATTORNEYS' FEES, ARISING FROM OR RELATING TO VIOLATION OR INFRINGEMENT OF A TRADEMARK, COPYRIGHT, PATENT, TRADE SECRET OR INTELLECTUAL PROPERTY RIGHT.

9. CONTRACTOR'S AFFIDAVIT:

When all work contemplated by this Contract has been completed, and has been inspected and approved by the City, or its duly authorized agent, the Contractor shall furnish to the City, a Contractor's Affidavit in a form acceptable to the City. Signed affidavits of payment will also be required by the City from any and all subcontractors hired by the Contractor, unless payment is approved by the surety in accordance with Florida Statutes, section 255.05(11). The affidavits shall state whether the subcontractor(s) has been paid in full or whether there are payments remaining. A list of all subcontractors shall be furnished to the City prior to any payments against the Contract.

10. TERMINATION AND DEFAULT:

The City Manager or designee shall have the right at any time upon thirty (30) calendar days written notice to the Contractor to terminate the services of the Contractor and, in that event, the Contractor shall cease work and shall deliver to the City all documents (including but not limited to reports, designs, specifications, and all other data) prepared or obtained by the Contractor in connection with its services. Upon delivery of the documents, the City shall pay the Contractor in full settlement of all claims by it hereunder as the work actually completed bears to the entire work under the Contract, as determined by the City, less payments already made to the Contractor, and any amounts withheld by the City to settle claims against or to pay indebtedness of the Contractor in accordance with the provisions of the Contract.

A. FUNDING IN SUBSEQUENT FISCAL YEARS: The parties acknowledge and agree that the obligations of the City to fulfill financial obligations of any kind pursuant to any and all provisions of this Contract, or any subsequent contract entered into pursuant to this Contract or referenced herein to which City is a party, are and shall remain subject to the provisions of Florida Statutes, Section 166.241, regardless of whether a particular obligation has been expressly so conditioned. City agrees to exercise all lawful and available authority to satisfy any financial obligations of City that may arise under this Contract; however, since funds are appropriated annually by the City Commission on a fiscal year basis, City's legal liability for the payment of any costs shall not arise unless and until appropriations for such costs are approved for the applicable fiscal year by the City Commission (nor shall such liability arise if, a request for such appropriations is excluded from the budget approved by the City Commission). It is expressly understood by the parties that funding for any subsequent fiscal year of the Contract is contingent upon appropriation of monies by the City Commissioners. In the event that funds are not available or appropriated, the City reserves the right to terminate the Contract. The City will be responsible for payment of any outstanding invoices and work completed by the Contractor prior to such termination.

B. ABANDONMENT: In the event that the Contractor has abandoned performance under this Contract, then the City Manager or designee may terminate this Contract upon three (3) calendar days' written notice to the Contractor indicating its intention to do so. The written notice shall state the evidence indicating the Contractor's abandonment.

C. The Contractor shall have the right to terminate the Contract only in the event of the City failing to pay the Contractor's properly documented and submitted invoice within ninety (90) calendar days of the approval by the City's Administrative Agent, or if the project is suspended by the City for a period greater than ninety (90) calendar days.

D. The City Manager or designee reserves the right to terminate and cancel this Contract in the event the Contractor shall be placed in either voluntary or involuntary bankruptcy, a receiver is appointed for the Contractor or an assignment is made for the benefit of creditors.

E. BREACH: In the event Contractor breaches this Contract, the City shall provide written notice of the breach and Contractor shall have ten (10) days from the date the notice is received to cure. If the Contractor fails to cure within the ten (10) days, the City Manager or designee shall have the right to immediately terminate the Contract and/or refuse to make any additional payment, in whole or in part, and, if necessary, may demand the return of a portion or the entire amount previously paid to Contractor due to:

1. The quality of a portion or all of the Contractor's work not being in accordance with the requirements of this Contract;

2. The quantity of the Contractor's work not being as represented in the Contractor's Payment Request, or otherwise;

3. The Contractor's rate of progress being such that, in the City's opinion, substantial or final completion, or both, may be inexcusably delayed;

4. The Contractor's failure to use Contract funds, previously paid the Contractor by the City, to pay Contractor's project related obligations including, but not limited to, subcontractors, laborers and material and equipment suppliers;

5. Claims made, or likely to be made, against the City or its property;

6. Loss caused by the Contractor;

7. The Contractor's failure or refusal to perform any of the obligations to the City, after written notice and a reasonable opportunity to cure as set forth above;

8. Violation of any local, state or federal law in the performance of this Contract shall constitute a material breach of this Contract.

9. In the event that the City makes written demand upon the Contractor for amounts previously paid by the City as contemplated in the clause, the Contractor shall promptly comply with such demand. The City's rights hereunder survive the term of this Contract, and are not waived by final payment and/or acceptance.

In the event that the City makes written demand upon the Contractor for amounts previously paid by the City as contemplated in the clause, the Contractor shall promptly comply with such demand. The City's rights hereunder survive the term of this Contract, and are not waived by final payment and/or acceptance.

F. TERMINATION WITH OR WITHOUT CAUSE: The performance of work under the Contract may be terminated with or without cause by the City Manager in whole or in part or whenever the City Manager determines that termination is in the City's best interest. Any such termination shall be effected by the delivery to the Contractor of a written notice of termination at least (30) days before the date of termination, specifying the extent to which performance of the work under the Contract is terminated and the date upon which such termination becomes effective. After receipt of a notice of termination, except as otherwise directed, the Contractor shall stop work on the date of receipt of the notice of termination or other date specified in the notice; place no further orders or subcontracts for material, services, or facilities except as necessary for completion of such portion of the work not terminated; terminate all vendors and subcontracts; and settle all outstanding liabilities and claims. The Contractor will be paid only for such work performed and materials supplied up to the termination. Under no circumstances shall the City make any payment to the Contractor for services that have not been performed or that are performed subsequent to the termination date.

11. INDEPENDENT CONTRACTOR:

The Contractor is, and shall be, in the performance of all work, services and activities under this Contract, an independent contractor, and not an employee, agent or servant of the City. All persons engaged in any of the work or services performed pursuant to this Contract shall at all times, and in all places, be subject to the Contractor's sole direction, supervision, and control. The Contractor shall exercise control over the means and manner in which it and its employees perform the work, and in all respects the Contractor's relationship and the relationship of its employees to the City shall be that of an independent contractor and not as employees or agents of the City. The Contractor does not have the power or authority to bind the City in any promise, agreement or representation other than as specifically provided for in this Contract. The Contractor shall not pledge the City's credit or make it a guarantor of payment of surety for any contract, debt, obligation, judgment, lien or any form of indebtedness. The Contractor further warrants and represents that it has no obligation or indebtedness that would impair its ability to fulfill the terms of this Contract.

12. SUBCONTRACTORS AND SUPPLIERS:

Contractor shall furnish to City a list of all subcontractors and/or suppliers prior to any payments against the Contract. All subcontractors are subject to City approval. No change in subcontractors or suppliers shall be made without written consent and approval from the City.

13. LICENSES AND PERMITS/LAWS AND REGULATIONS:

The Contractor shall pay all taxes required by law in connection with the activity in accordance with this Contract including sales, use, and similar taxes, and unless mutually agreed to in writing to the contrary, shall secure all licenses and permits necessary for proper completion of the work, paying any fees therefore. Violation of any local, state or federal law in the performance of this Contract shall constitute a material breach of this contract. The Contractor shall comply with all laws and ordinances, and the rules, regulations, and orders of all public authorities relating to the performance of the work herein. If any of the Contract documents are at variance therewith, the Contractor shall notify the City promptly on the discovery of such variance.

14. AMENDMENT:

This Contract constitutes the sole and complete understanding between the parties and supersedes all agreements between them, whether oral or written with respect to the subject matter. No amendment, change or addendum to this Contract is enforceable unless agreed to in writing by both parties and incorporated into this Contract. In the event the Contractor begins work on unauthorized changes to scope prior to receiving a signed Change Order by the City Manager or designee, the Contractor does so at its own expense and risk as unauthorized work shall not be paid for by the City.

The City Manager or designee may agree to amendments that do not increase compensation to Contractor**.** The City Commission shall approve all increases in compensation under this Contract.

15. EQUAL EMPLOYMENT OPPORTUNITY:

The City of North Port, Florida, in accordance with the provisions of Title VII of the Civil Rights Act of 1964 (78 Stat. 252) and the Regulations of the Department of Commerce (15 CFR, Part 8) issued pursuant to such Act, hereby notifies all bidders that it will ensure that in any Contract entered into pursuant to this advertisement, minority business enterprises will be afforded full opportunity to submit replies in response to this advertisement and will not be discriminated against on the ground of race, color or national origin in consideration for an award.

16. NON-DISCRIMINATION:

The City of North Port does not discriminate on the basis of race, color, national origin, sex, age, disability, family or religious status in administration of its programs, activities or services. Pursuant to Florida Statutes, section 287.134(2)(a), an entity or affiliate who has been placed on the discriminatory vendor list may not submit a bid, proposal, or reply on a contract to provide any goods or services to a public entity; may not submit a bid, proposal, or reply on a contract with a public entity for the construction or repair of a public building or public work; may not submit bids, proposals, or replies on leases of real property to a public entity; may not be awarded or perform work as a Contractor, supplier, subcontractor, or consultant under a contract with any public entity; and may not transact business with any public entity.

17. ASSIGNMENT:

The Contractor shall not assign any interest in this Contract and shall not transfer any interest in same (whether by assignment or novation) without prior written consent of the City Manager or designee, except that claims for the money due or to become due the Contractor from the City under this Contract may be assigned to a financial institution or to a trustee in bankruptcy. Notice shall be promptly given to the City.

18. NOTICES:

Any notice, demand, communication, or request required or permitted hereunder shall be sent by certified mail, return receipt requested, and shall be mailed and e-mailed to:

As to the City: Michael Acosta, P.E. Utilities Engineering Manager
City of North Port Utilities Department
6644 W Price Blvd.
North Port, Florida 34291
Tel: 941.240. 8013

Fax: 941.240.8022

E-Mail: macosta@cityofnorthport.com

With copies of notices and demands sent to:

City of North Port, Florida
City Attorney's Office
4970 City Hall Boulevard
North Port, Florida 34286
aslayton@cityofnorthport.com

As to CONTRACTOR:

Notices shall be effective when received at the addresses specified above. Changes in the respective addresses which such notice is to be directed may be made from time to time by either party by written notice to the other party. Facsimile transmission is acceptable notice effective when received, however, facsimile transmissions received after 5:00 pm or on weekends or holidays, will be deemed received on the next business day. The original of the notice must additionally be mailed as required herein. Nothing in this Article shall be construed to restrict the transmission of routine communications between representatives of Contractor and City.

19. WAIVER:

No delay or failure to enforce any breach of this Contract by either City or Contractor shall be binding upon the waiving party unless such waiver is in writing. In the event of a written waiver, such a waiver shall not affect the waiving party's rights with respect to any other or further breach. The making or acceptance of a payment by either party with knowledge of the existence of a default or breach shall not operate or be construed to operate as a waiver of any subsequent default or breach.

20. ATTORNEY'S FEES:

In any proceedings between the parties arising out of or related to this Contract, the prevailing party shall be reimbursed all costs, expenses and reasonable attorney fees through all proceedings, at both trial and appellate levels.

21. GOVERNING LAW, VENUE AND SEVERABILITY:

The rights, obligations and remedies of the parties under this Contract shall be governed by the laws of the State of Florida and the exclusive venue for any legal or judicial proceedings in connection with the enforcement or interpretation of this Contract shall be in Sarasota County, Florida. The invalidity, illegality, or unenforceability of any provision of this Contract shall in no way affect the validity or enforceability of any other portion or provision of the contract. Any void provision shall be deemed severed from the Contract and the balance of the Contract shall be construed and enforced as if the Contract did not contain the particular portion or provision held to be void.

22. PARAGRAPH HEADINGS:

Paragraph headings are for the convenience of the parties and for the reference purposes only and shall be given no legal effect.

23. ENTIRE AGREEMENT:

This Contract (with all referenced plans, attachments, addenda and provisions incorporated by reference) embodies the entire agreement of both parties, superseding all oral or written previous and contemporary agreements between the parties relating to matters set forth in this Contract. In the event of any conflict between the provisions of this Contract and the RFB or Contractor's bid, this signed Contract (excluding the RFB and Contractor's bid) shall take precedence, followed by the provisions of the RFB, and then by the terms of the Contractor's bid.

24. SCRUTINIZED COMPANIES:

A. As required by section 287.135(5), Florida Statutes, for contracts of $1,000,000.00 or less, the Contractor shall certify on a form provide by the City, that it is not on the Scrutinized Companies that Boycott Israel List, created pursuant to section 215.4725, Florida Statutes, and that it is not engaged in a boycott of Israel.

B. As required by section 287.135(5), Florida Statutes, for contracts of $1,000,000.00 or more, the Contractor shall certify on a form provided by the City, that all of the following are true:

1. It is not on the Scrutinized Companies that Boycott Israel List, created pursuant to section 215.4725, Florida Statutes, and that it is not engaged in a boycott of Israel; and

2. It is not on the Scrutinized Companies with Activities in Sudan list or the Scrutinized Companies with Activities in Iran Petroleum Energy Sector list, created pursuant to section 215.473, Florida Statutes; and

3. It is not engaged in business operations in Cuba or Syria.

C. If the Contractor provides a false certification or has been placed on one of the above-noted Lists of Scrutinized Companies, or has engaged in business operations in Cuba or Syria, the Contractor will be in breach of this Contract and the City may terminate the Contract.

D. PENALTY:

1. A Contractor that has been found to have provided a false certification may be subject to a civil penalty equal to the greater of $2 million or twice the amount of the Contract, plus all reasonable attorney's fees and costs, including any costs for investigations that led to the finding of the false certification; and

2. Shall be ineligible to bid on any contract with the City for three (3) years after the date the City determined that the Contractor submitted a false certification.

IN WITNESS WHEREOF, the parties have hereto caused the execution of these documents, the year and date first above written.

ATTEST: **CITY OF NORTH PORT, FLORIDA**

By:_____ **By:**_____

Kathryn Peto, Interim City Clerk, MMC **Peter D. Lear, CPA, CGMA, City Manager**

APPROVED AS TO FORM AND CORRECTNESS:
By: _____
Amber L. Slayton, City Attorney

WITNESS:
By:_____

CONTRACTOR:
By:_____

CITY OF NORTH PORT

TECHNICAL SPECIFICATIONS

FOR

CRANBERRY BRIDGE CROSSING WM REPLACEMENT

Final Design

August 2018

Prepared by

CONSULTING ENGINEERS
5621 Banner Drive
Fort Myers, Florida 33912
Engineering Certification # 5762

Douglas H. Eckmann, P.E. Date
Florida Registration No. 47259

SECTION 01 11 00

SUMMARY OF WORK

PART 1 – GENERAL

1.01 SUMMARY

A. Section Includes:

1. Description of Work covered by Contract Documents.
2. Description of Work by Others.

1.02 WORK COVERED BY SPECIFICATIONS AND DRAWINGS

A. General: The Work to be done under this Contract consists of the construction of a new relocated potable water transmission main directionally drilled under the Snover Waterway along the North Cranberry Boulevard from approximately 15 feet south of Traverse Boulevard (STA 15+15) to Tusket Boulevard (STA 10+58). The Work includes furnishing labor, materials, equipment, services, and incidentals for this pipeline relocation project. The work includes but is not limited to the following:

1. Approximately 430 feet of 14-inch HDPE of new potable water main pipe installed by the horizontal directional drill method;

2. Approximately 60 feet of new 12-inch PVC potable water main pipe installed by the open trench method;

3. Approximately 25 feet of a single 1-inch water main residential service connection from the new 12-inch main to the existing meter, per the drawings.

4. Installation of 2 new gate valves and ARV's;

5. The Abandonment of AC pipe and the removal of exposed CI pipe along bridge.

B. The Work includes:

1. Furnishing of all labor, material, superintendence, plant, power, light, heat, fuel, water, tools, appliances, equipment, supplies, services and other means of construction necessary or proper for performing and completing the Work.

2. Maintaining the work area and site in a clean and acceptable manner.

3. Maintaining existing facilities in service at all times except where specifically provided for otherwise herein.

4. Protection of finished and unfinished Work.

5. Repair and restoration of Work damaged during construction.

6. Furnishing as necessary proper equipment and machinery, of a sufficient capacity, to facilitate the Work and to handle all emergencies normally encountered in Work of this character.

C. Implied and Normally Required Work: It is the intent of these Specifications to provide the OWNER with complete operable systems, subsystems and other items of Work. Any part or item of Work which is reasonably implied or normally required to make each installation satisfactorily and completely operable is deemed to be included in the Work and the Contract Amount. All miscellaneous appurtenances and other items of Work incidental to meeting the intent of these Specifications are included in the Work and the Contract Amount even though these appurtenances may not be specifically called for in these Specifications.

1.03 CONTACTS

A. Owner, Engineer, and Engineer's Sub-Consultants are as follows:

1. Owner: .....City of North Port

   Owner's Address:.....4970 City Hall Blvd., Suite 128
   North Port, FL 34286

   Owner's Project Manager:.....Mike Vuolo.

   Phone Number:.....941-204-7957

2. Engineer.....TKW Consulting Engineers, Inc.

   Engineer's Address: .....5621Banner Drive
   Fort Myers, Florida 33912

   Engineer's Project Manager: .....Doug Eckmann, P.E.

   Phone Number:.....239-278-1992

1.04 WORK BY OTHERS

A. None

1.05 CONTRACTOR'S USE OF SITE

A. In addition to the requirements of the General Conditions, limit use of site and premises for work and storage to allow for the following:

1. Coordination of site use with ENGINEER.

2. Responsibility for protection and safekeeping of products under this CONTRACT.

3. Providing additional off site storage at no additional cost to OWNER as needed.

PART 2 – PRODUCTS (not used)

PART 3 – EXECUTION (not used)

END OF SECTION 01 11 00

SECTION 01 14 19

OCCUPANCY

PART 1 – GENERAL

1.01 SUMMARY

A. Section Includes: Requirements for site occupancy.

1.02 CONTRACTOR USE OF PROJECT SITE

A. Contractor's use of project site shall be limited to the Contractor's construction operations, including on-site storage of materials, on-site fabrication facilities, and field offices as provided in the General Conditions.

B. Contractor shall confine construction equipment, the storage of materials and equipment and the operations of workers to the site and land and areas identified in and permitted by the Specifications and Drawings and other land and areas permitted by Laws and Regulations, rights-of-way, permits and easements, and shall not unreasonably encumber the premises with construction equipment or other materials or equipment.

1.03 OWNER USE OF PROJECT SITE

A. Owner may utilize all or part of the existing facilities during the entire construction period for the conduct of the Owner's normal operations.

B. Contractor shall schedule and coordinate the Work to minimize interference between construction operations and Owner's operation and maintenance of facilities in service.

1.04 OPERATION AND MAINTENANCE OF FACILITIES IN SERVICE

A. Operation

1. Owner shall operate facilities as follows:

a. Existing facilities that are to remain in service, with modification or improvements, throughout Project duration;

b. Existing facilities that are in service prior to modification or demolition under this Project;

c. Modified and upgraded facilities that have been completed and accepted by the Owner; and

d. New facilities that have been completed and accepted by the Owner.

2. Contractor shall operate or assist in the operation of new facilities and modified facilities during testing of new facilities and modified facilities.

B. Maintenance

1. Owner shall maintain existing facilities that have not been removed from service for modification or demolition.

2. Owner shall maintain new facilities and modified facilities that have been accepted.
3. New or modified facilities shall be placed in service prior to acceptance if required to meet regulatory requirements for treatment quality. New or modified facilities shall be placed in service prior to acceptance if required to complete Work on schedule. If new facilities or modified facilities in service prior to acceptance of new or modified facilities, Contractor shall maintain new or modified facilities until new or modified facilities are accepted. Contractor shall provide maintenance at no additional cost to the Owner.

PART 2 – PRODUCTS (not used)

PART 3 – EXECUTION (not used)

END OF SECTION 01 14 19

SECTION 01 22 13

MEASUREMENT AND PAYMENT

PART 1 – GENERAL

1.01 SECTION INCLUDES

A. Explanation and Definitions

B. Measurement

C. Payment

1.02 EXPLANATION AND DEFINITIONS

A. The following explanation of the Measurement and Payment for the bid form items is made for information and guidance. The omission of reference to any item in this description shall not, however, alter the intent of the bid form or relieve the CONTRACTOR of the necessity of furnishing such as a part of the Contract.

1.03 MEASUREMENT

A. The quantities set forth in the bid form are approximate and are given to establish a uniform basis for the comparison of bids. The OWNER reserves the right to increase or decrease the quantity of any class or portion of the work during the progress of construction in accordance with the terms of the Contract.

1.04 PAYMENT

A. Payment shall be made for the items listed on the Bid Form on the basis of the work actually performed and completed, such work including but not limited to, the furnishing of all necessary labor, materials, equipment, transportation, clean up, restoration of disturbed areas, and all other appurtenances to complete the construction and installation of the work as shown on the drawings and described in the specifications.

B. Unit prices are used as a means of computing the final figures for bid and Contract purposes, for periodic payments for work performed, for determining value of additions or deletions and wherever else reasonable.

1.05 SCHEDULE OF VALUES

A. Approval of Schedule: Submit for approval a preliminary schedule of values, in duplicate, for all of the Work in accordance with the General Conditions. Submit preliminary schedule of values within 10 calendar days after the Effective Date of the Agreement and the pre construction meeting shall be within 10 calendar days of the commission meeting.

B. Format: Utilize a format similar to the Table of Contents of the Project Specifications. Identify each line item with number and title of the major specification. Identify site mobilization, maintenance of traffic, field layout and record drawings, and closeout. Include within each line item, a direct proportional amount of CONTRACTOR's

overhead profit.

C. Revisions: With each Application for Payment, revise schedule to list approved Change Orders.

1.06 APPLICATION FOR PAYMENT

A. Required Copies: Submit three copies of each application on EJCDC Form No. 1910-8-E (1990) or approved equal. Present required information in typewritten form or on electronic media printout.

B. Execute certification by signature of authorized officer.

C. Use data from approved Schedule of Values.

D. Stored Materials: When payment for materials stored is permitted, submit a separate schedule for Materials Stored showing line item, description, previous value received, value incorporated into the Work and present value.

E. Change Orders: List each authorized Change Order as an extension on continuation sheet, listing Change Order number and dollar amount as for an original item of work.

F. Final Payment: Prepare Application for Final Payment as required in the General Conditions.

G. Submit an updated construction schedule for each Application for Payment.

H. Submit application for payment to ENGINEER on, or before, the 25th day of each month.

PART 2 – PRODUCTS (not used)

PART 3 – EXECUTION

3.01 MEASUREMENT AND PAYMENT

A. Payment shall be made on the basis of work actually performed completing each item in the Bid, such work including, but not limited to, the furnishing of all necessary labor, materials, equipment, transportation, cleanup, and all other appurtenances to complete the construction and installation of the work to the configuration and extent as shown on the drawings and described in the specifications. Payment for each item includes compensation for cleanup and as-builts.

1. Mobilization: The lump sum amount as specified to be paid for mobilization shall include materials, labor, equipment, and services necessary to mobilize all material, labor forces, equipment, tools, and construction facilities at the project site as required to start construction of the Work. This item includes, but is not limited to, all bonds and permits required prior to the start of construction. The amount paid for this item shall not exceed six percent (6%) of the total base bid price. If the bid amount for this item exceeds six percent of the total base bid price, the amount over six percent of the total base bid price shall not be paid prior to substantial completion of the Work.

2. Maintenance of Traffic: The lump sum amount as specified to be paid for maintenance of traffic shall include all materials, labor, equipment, and services necessary to complete Work specified in Section 01 55 26 Traffic Regulation.

3. Field Layout and Record Drawings: The lump sum amount as specified to be paid for field layout and record drawings shall include all materials, labor, equipment, and service necessary to complete Work specified in Section 01 71 23 Field Engineering and complete project record drawings specified in Section 01 71 23.

4. Close-out: The lump sum amount as specified to be paid for close-out shall include all materials, labor, equipment, and services necessary to complete site clean-up, final submittals, touch-up and repair.

5. Potable Water Mains (Horizontal Directional Drill): The unit prices as specified to be paid for potable water main installed by the horizontal directional drill method shall include the furnishing of all materials, labor, equipment, and services to construct and test the potable water main. This item includes all necessary labor, equipment and materials for pipe installed by the horizontal directional drill method and the HDPE fusion welded MJ Adapter / Reducer and any other additional fittings if necessary; signs; dewatering; excavation; disposal of water and excess excavated materials; erosion control best management practices; removal of all material encountered, including soil, rock, and other materials; hydrostatic testing; temporary bacteriological sample points as shown on the drawings; bacteriological testing; clean up; and all other work for a complete installation and ready for operation. Measurement of the pipe installed by the horizontal directional drill method shall be to the nearest foot along the pipe centerline. Linear footage measurement shall be horizontal.

6. Potable Water Mains (in open-cut trench): The unit prices as specified to be paid for all potable water mains installed by the open-cut method shall include the furnishing of all materials, labor, equipment, and services necessary to construct and test the potable water mains, complete and ready for service, as shown on the Drawings and as specified. The work shall include all pipe, joint materials, joint restraint, excavation, installing and joining of pipe and fittings, removal and disposal of water, bedding, haunching, initial fill, final fill, sheeting and shoring, disposal of excess excavated materials, protection of existing structures and utilities, flushing, hydrostatic testing, temporary bacteriological sample points as required per the approved DOH permit plans, bacteriological testing, clean-up, and all other work necessary to complete the installation of potable water mains by the open-cut method unless specifically covered by

other pay items under this Contract. The actual number of linear feet of potable water mains furnished and installed by the open-cut method, measured along the centerline of the pipe, will be measured for payment under the "Potable Water Mains (in open-cut trench)" items. No deducts will be made for laying lengths of fittings or valves.

7. Fittings: The unit price as specified to be paid for all fittings shall include the furnishing of all fittings and appurtenances and all work including excavation, placing and joining fittings to pipes, thrust blocks for tees and tapping sleeves, backfilling, clean-up, and all other operations necessary to complete the installation of fittings. The actual number of fittings of the types and sizes furnished and installed in the Work will be measured for payment.

8. Gate Valves and Boxes: The unit prices as specified to be paid for all resilient wedge gate valves and boxes shall include the furnishing of all products and all work including excavation, placing and joining valves to pipe lines, including installing valve boxes with concrete collars, including valve stem and valve box extensions, including testing, backfilling, clean-up, painting of valve box covers, and all other operations necessary to complete the installation of gate valves and boxes. This item also includes the installation of base material below the valve in accordance with the detail shown in the Plans. The actual number of gate valves of the sizes furnished and installed in the Work will be measured for payment.

9. Connections/Tie-Ins: The unit prices as specified to be paid for all dry connections shall include the location of the existing mains, excavation, thrust block per details in Plans, backfill, disposal of water and excess excavated materials, sheeting and shoring, cutting and fitting of the mains to the measurements required for the installation of the new pipe, clean up, and all other operations necessary to complete the connection ready for operation. The actual number of dry connections furnished and installed in the Work will be measured for payment. Any fittings required for installation of dry connections shall be measured for payment under fittings. Any valves required for installation of dry connections shall be measured for payment under the applicable valve types.

10. Air Release Valves: The unit price as specified to be paid for all air release valves shall include the furnishing of all air release valves, saddles, corporation stops, curb stops, gate valves, connecting pipe and fittings, enclosures for air release valves, and appurtenances and all work including excavation, backfill, disposal of water and excess excavated materials, sheeting and shoring, installation and joining of saddles, valves, pipe, and fittings, testing, clean-up, and all other operations necessary to complete the air release valves ready for operation. The actual number and type of air release valves furnished and installed in the Work will be measured for payment.

11. Furnish and Install Water Services (Reconnections to Existing Meters): Payment for furnishing and installing 1-inch diameter water services will be made at the appropriate Contract unit price for each P.E. short side and long side service acceptably installed. This item includes all labor, equipment and materials for furnishing and installing all necessary pipe, fittings, connections, casing pipes, meter stops, meter box, tapping sleeves, protection of existing utilities and facilities, excavation, pipe bedding, dewatering, compaction, removal and replacement of grass, sod, shrubs, pavement, driveways, culverts and storm sewers, mailboxes, sidewalks and other surface materials not specifically designated in the Bid, cleanup, testing and all other work for a complete installation. Unit price for 1" will also apply for ¾" water services.

12. Abandon-In-Place With Flowable Fill Existing Asbestos Cement Water Mains: The unit price as specified to be paid for this line item shall include all materials, labor, equipment, and services necessary to complete abandonment-in-place of existing segments of asbestos cement water mains as shown on the drawings with flowable fill. Contractor to document and record visual evidence of fill at the location of the bridge abutments before mortaring each end closed. Payment for abandoning-in-place AC pipe with flowable fill will be made at the appropriate Contract Unit price per cubic yard of flowable fill required.

13. Removal of Exposed 12" Steel Pipe: The lump sum amount as specified to be paid for removal and disposal of the existing exposed 12" steel pipe and its associated steel hangars shall include all materials, labor, equipment, and services necessary to complete the Work specified in the drawings.

14. Restore Sidewalk: The unit price as specified to be paid for this line item shall include all materials, labor, equipment, and services necessary to restore / install concrete sidewalk in accordance with the City of North Port Specifications. Payment for sidewalk restoration will be made at the appropriate Contract Unit price per square yard installed.

15. Sodding: The unit price as specified to be paid for this line item shall include all materials, labor, equipment, and services necessary to restore affected site. Contractor to grade area prior to sod placement, place sod, use fertilizer and water as necessary to keep it alive during the duration of the project. Payment for sod will be made at the appropriate Contract unit price per square yard of sod acceptably installed.

END OF SECTION 01 22 13

SECTION 01 25 00

PRODUCT SUBSTITUTION PROCEDURES

PART 1 – GENERAL

1.01 SUMMARY

A. Section Includes

1. Requirements and procedures for requesting substitutions.
2. Procedures for consideration of proposals for substitution.

1.02 REQUESTS FOR SUBSTITUTIONS

A. Contractor and Sub-Contractors may request substitution of certain products as specified in Section 01 62 00 Product Options.

1. If Contractor wishes to furnish or use a substitute item of material or equipment, Contractor shall make application to the Engineer for acceptance thereof.
2. If Sub-Contractor wishes to furnish or use a substitute item of material or equipment, Sub-Contractor shall make application to the Contractor for acceptance thereof.

B. Document each request with complete data substantiating compliance of proposed substitution with Contract documents.

C. Request constitutes a representation that Contractor, or Sub-Contractor, as appropriate:

1. Has investigated proposed product and determined that it meets or exceeds, in all respects, specified product;
2. Will provide the same warranty for substitution as for specified product;
3. Will coordinate installation and make other changes which may be required for Work to be complete in all respects, at no additional cost to the Owner; and
4. Waives claims for additional costs which may subsequently become apparent.

1.03 CONSIDERATION OF REQUESTS FOR SUBSTITUTION

A. Engineer will determine acceptability of proposed substitution, and will notify Contractor of acceptance or rejection in writing within a reasonable time.

B. Substitutions will not be considered when acceptance will require substantial revision of Contract Documents.

C. Substitutions will not be considered when they are indicated or implied on shop drawing or product date submittals without separate written request.

1.04 SHOP DRAWINGS, PRODUCT DATA, AND SAMPLES FOR SUBSTITUTIONS

A. Do not submit shop drawings, product data, or samples for substitution prior to acceptance of substitution by Engineer and Owner. Drawings, data, and samples

submitted with request for substitution will not be considered for review under Section 01 33 23 Shop Drawings, Product Data, and Samples.

B. Shop drawings, product data, and samples for substitutions shall meet the requirements of Section 01 33 00 Submittal Procedures and Section 01 33 23 Shop Drawings, Product Data, and Samples.

PART 2 – PRODUCTS (not used)

PART 3 – EXECUTION (not used)

END OF SECTION 01 25 00

SECTION 01 26 00

CONTRACT MODIFICATION PROCEDURES

PART 1 – GENERAL

1.01 SUMMARY

A. Section Includes: Procedures for preparation, submittal, and processing contract modifications.

1.02 SUBMITTALS

A. General: as specified in:

1. Section 01 33 00 Submittal Procedures;
2. The General Provisions, Special Provisions, and conditions of the Contract for construction; and
3. This Section.

B. Authorized Person: Submit name of the individual authorized to accept changes, and to be responsible for informing others in Contractor's employ of changes in the Work.

C Change Order Form: Change Order form as included in the Contract Documents.

1.03 DOCUMENTATION OF CHANGE IN CONTRACT SUM AND CONTRACT TIME

A. Maintain detailed records of work done on a time and material basis. Provide full information required for evaluation of proposed changes, and to substantiate costs of changes in the Work.

B. Document each quotation for a change in cost or time with sufficient data to allow evaluation of the quotation.

C. On request, provide additional data to support computations

1. Itemized quantities of products, labor, and equipment.
2. Taxes, insurance and bonds.
3. Overhead and profit.
4. Justification for any change in Contract Time.
5. Credit for deletions from Contract, similarly documented.

D. Support each claim for additional costs, and for work done on a time and material basis, with additional information

1. Origin and date of claim.
2. Dates and times work was performed, and by whom.
3. Time records and wage rates paid.
4. Invoices and receipts for products, equipment, and subcontracts, similarly documented.

1.04 MINOR CHANGES

A. Engineer will advise of minor changes in the work not involving an adjustment to Contract Sum/Price or Contract Time as authorized by the General Conditions by issuing supplemental instructions.

1.05 PRELIMINARY PROCEDURES

A. Engineer may issue a Proposal Request which includes a detailed description of a proposed change with supplementary or revised Drawings and specifications, a change in Contract Time for executing the change with a stipulation of any overtime work required and the period of time during which the requested price will be considered valid. Contractor will prepare and submit an estimate within ten days.

B. Contractor may propose a change by submitting request for change to the Engineer, describing the proposed change and its full effect on the Work. Include a statement describing the reason for the change, and the effect on the Contract Sum/Price and Contract Time with full documentation and a statement describing the effect on Work by separate or other contractors. Document any requested substitutions in accordance with Section 01630 Product Substitution Procedures.

1.06 LUMP SUM CHANGE ORDER

A. Will be based on Proposal Request and Contractor's lump sum quotation or Contractor's request for Change Order as approved by Engineer.

1.07 UNIT PRICE CHANGE ORDER

A. For pre-determined unit prices and quantities, Change Order will be executed on a fixed unit price basis.

B. For unit costs or quantities of units of work which are not pre-determined, execute Work under a Work Directive Change or Cost Reimbursement Change Order. Changes in Contract Sum/Price or Contract Time will be computed as specified for Time and Material or Force Account Change Order.

1.08 TIME AND MATERIAL/FORCE ACCOUNT CHANGE ORDER

A. Maintain detailed records of work done on Time and Material or Force Account basis. Provide full information required for evaluation of proposed changes, and to substantiate costs for changes in the Work.

B. Submit itemized account and supporting data after completion of change, within time limits in Conditions of the Contract. Submit invoices and time sheets signed by Resident Project Representative.

C. Engineer will determine the change allowable in Contract Sum and Contract Time as provided in Conditions of the Contract.

1.9 EXECUTION OF CHANGE ORDERS

A. Owner will issue Change Orders for signatures of parties as provided in General Conditions.

1.10 CORRELATION OF CONTRACTOR SUBMITTALS

A. Promptly revise Schedule of Values and Application for Payment forms to record each authorized Change Order as a separate line item and adjust the Contract Sum as shown on Change Order.

B. Promptly revise Progress Schedules to reflect any change in Contract Time, revise subschedules to adjust times for other items of work affected by the change, and resubmit.

C. Promptly enter changes in Project Record Documents.

PART 2 – PRODUCTS (not used)

PART 3 – EXECUTION (not used)

END OF SECTION 01 26 00

THIS PAGE INSERTED FOR CORRECT PAGINATION

SECTION 01 29 73

SCHEDULE OF VALUES

PART 1 – GENERAL

1.01 SUMMARY

A. Section Includes: Procedures for preparation and submittal of Schedule of Values.

1.02 SUBMITTALS

A. General: As specified in:

1. Section 01 33 00 Submittal Procedures; and
2. This Section.

1.03 FORMAT

A. Submit printed or plotted schedule. Paper size shall not exceed 11 x 17 inches.

B. Submit schedule in electronic *.pdf format.

C. Schedule shall meet requirements of funding agency.

D. Submit schedule on AIA Form G703 - Application and Certificate for Payment Continuation Sheet or other form acceptable to the Owner.

1.04 SUBSTANTIATING DATA

A. When Engineer requires substantiating information, submit data justifying line item amounts in question.

B. Provide one copy of data with cover letter for each copy of Application. Show Application number and date, and line item by number and description.

1.05 CONTENT

A. List installed value of each major item of Work as a separate line item to serve as a basis for computing values for Progress Payments.

B. Coordinate listings with Progress Schedule.

C. The sum of values listed shall equal total Contract Sum.

D. Revise schedule to list approved Change Orders, with each Contract Application for Payment.

E. Schedule of Values shall be at a minimum, categorized as follows:

1. Line items shall be itemized and broken out per the Bid Form.

1.06 ENGINEER AND OWNER REVIEW

A. Schedule of Values shall be submitted to Engineer and Owner within 10 days of Notice To Proceed. Schedule of Values shall be reviewed by Engineer and Owner, as specified in the General Conditions.

B. Schedule of Values shall meet requirements of Engineer and Owner.

C. Revise Schedule of Values to meet requirements of Engineer and Owner.

PART 2 – PRODUCTS (not used)

PART 3 – EXECUTION (not used)

END OF SECTION 01 29 73

SECTION 01 29 76

APPLICATION FOR PAYMENT

PART 1 – GENERAL

1.01 SUMMARY

A. Section Includes: Procedures for preparation and submittal of Applications for Payment.

1.02 SUBMITTALS

A. General: as specified in:

1. Section 01 33 00 Submittal Procedures; and
2. This Section.

1.03 FORMAT

A. Periodical Estimate for Partial Payment Form as included in the Contract Documents.

B. Provide as shown on form included in Contract Documents.

1.04 PREPARATION OF APPLICATIONS

A. General

1. Lump Sum Contracts: Use data on accepted Schedule of Values. Provide dollar value in each column for each line item for portion of Work performed.
2. Unit Price Contracts: Bid quantity and unit price for each unit price item shall be as shown on the Bid Schedule in the Contractor's Proposal. Provide quantity and unit price extension for each unit price item completed. Partial payment extensions for unit price items shall be mathematically correct.
3. Change Orders: List each authorized Change Order, listing Change Order number and dollar amount as for an original item of Work.

B. Preparation and Execution

1. Print or plot required information.
2. Execute certification, of each copy of each Application for Payment, by signature of authorized officer.

C. Application for Final Payment

1. Application for Final Payment shall meet requirements for periodic Applications for Payment.
2. Application for Final Payment shall meet requirements of Section 01 77 00 Contract Closeout relative to Application for Final Payment.
3. Application for Final Payment shall not include stored materials.

1.05 SUBSTANTIATING DATA

A. When Engineer requires substantiating information, submit data justifying line item amounts in question.

B. Provide one copy of data with cover letter with each copy of Application for Payment. Show Application number and date, and line item by number and description.

C. Stored materials will not be paid for unless invoices for the stored materials are attached to the Application for Payment.

1.06 SCHEDULE UPDATES

A. Provide schedule updates with Application for Payment.

B. Application for Payment will be rejected if schedule updates are not included as specified.

1.07 STORED MATERIALS

A. Invoices must be submitted as a prerequisite for payment of stored materials. The invoice must contain the project title on the invoice.

B. Release of Liens will be required the following month for materials submitted the previous month for payment as stored materials.

C. Materials submitted must be stored on site unless an alternate location is approved by the Engineer and accepted by the Owner.

PART 2 – PRODUCTS (not used)

PART 3 – EXECUTION (not used)

END OF SECTION 01 29 76

SECTION 01 31 13

COORDINATION

PART 1 – GENERAL

1.01 SUMMARY

A. Section Includes: Requirements and procedures for coordination of Work.

B. Related Sections: Section 01 31 13.13 Mechanical and Electrical Coordination

1.02 COORDINATION, GENERAL

A. Coordinate scheduling, submittals, and work of the various sections of Specifications so that the Work is done in an efficient and orderly manner.

B. At each stage of the Work make provisions for later stages of the Work.

1.03 COORDINATION MEETINGS

A. Conduct coordination meetings as specified in Section 01 31 19.23 Progress Meetings.

B. Hold coordination meetings and pre-installation meetings with personnel and subcontractors to assure coordination of Work.

1.04 COORDINATION OF INSPECTIONS

A. Coordinate all inspections required by the various agencies, Owner, and Engineer.

B. Notify Engineer in writing not less than 48 hour notice prior to any inspection.

1.05 COORDINATION OF SUBMITTALS

A. General: As specified in:

1. General Provisions, Special Provisions, conditions of the Contract for construction; and

2. Section 01 33 00 Submittals.

B. Coordination of Submittals

1. Schedule and coordinate submittals.

2. Coordinate work of various Sections having interdependent responsibilities for installing equipment, connecting to equipment, and placing equipment in service.

3. Coordinate requests for substitutions.

a. Verify that substitutions can be properly installed and operated in the space provided.

b. Make provisions for modifications required for the proper installation and operation of substitutes.

c. Verify compatibility of operating elements, and effect on work of other Sections.

1.06 UTILITIES

A. Coordinate location, protection, and relocation of existing utilities as specified in Section 01 73 29 Cutting and Patching.

B. Coordinate connection of sanitary sewer, potable water and storm drains to buildings.

1. If any of this work depends upon work of other contractors, report to Engineer any defects in such other work that renders it unsuitable for proper execution and results.

2. Failure to report any defects in other work shall constitute acceptance (at Contractor's risk) of other contractor's work as suitable for connection.

1.07 CUTTING, PATCHING, AND JOINING

A. Cutting, patching, and joining shall meet the requirements of Section 01 73 29 Cutting and Patching.

B. Coordinate cutting, patching, and joining of work of various trades.

C. Execute cutting, patching, and joining required to complete Work, and to:

1. Fit the several parts together, to integrate with other work.

2. Uncover work to install ill-timed work.

3. Remove and replace defective and non-conforming work.

4. Remove samples of installed work for testing.

5. Provide openings in elements of Work for penetrations of mechanical and electrical work.

1.08 CONTRACT CLOSEOUT

A. Contract closeout shall meet the requirements of Section 01 77 00 Contract Closeout.

B. Coordinate completion and cleanup of work of separate sections in preparation for Substantial Completion. Coordinate completion and cleanup of Work of prior to Final Completion.

C. After Owner occupancy of premises, coordinate access to site by various sections for correction of defective work and work not in accordance with Contract Documents, to minimize disruption of Owner's activities.

D. Assemble and coordinate closeout submittals specified in Section 01 77 00 Contract Closeout.

PART 2 – PRODUCTS (not used)

PART 3 – EXECUTION (not used)

END OF SECTION 01 31 13

THIS PAGE INSERTED FOR CORRECT PAGINATION

SECTION 01 31 19.13

PRE-CONSTRUCTION CONFERENCES

PART 1 – GENERAL

1.01 SUMMARY

A. Section Includes: Requirements for arrangements, participants, and agenda for preconstruction conferences.

1.02 PRECONSTRUCTION CONFERENCE

A. Date and Time: Scheduled by Owner or Engineer after Notice of Award.

B. Location: At location designated by Owner or Engineer.

C. Attendance:

1. Representatives of Owner;
2. Engineer;
3. Resident Project Representative;
4. Contractor;
5. Major subcontractors listed on proposal;
6. Representatives of applicable regulatory authorities;
7. Representatives of funding agency;
8. Representatives of affected utilities.

D. Purpose:

1. Establish a working relationship;
2. Identify responsible personnel;
3. Discuss procedures;
4. Discuss project coordination.

E. Documents to be provided by Contractor:

1. The following Schedules shall be submitted prior to the Preconstruction Conference:
   a. Preliminary Schedule of Work;
   b. Preliminary Submittal Schedule for Shop Drawings and Samples;
   c. Schedule of Values.
2. Hurricane Preparedness Plan shall be submitted within 30 days after receipt of Notice of Award. The Plan shall outline the necessary measures which the Contractor proposes to perform at no additional cost to the Owner in case of a hurricane warning.

F. Agenda:

1. Schedule of values, and progress schedule.
2. Designation of responsible personnel.
3. Procedures and processing of field decisions, submittals, substitutions, applications for payments, proposal requests, change orders, and Contract close-out procedures.
4. Scheduling.
5. Work sequencing.
6. Utility coordination.
7. Other issues as required or requested by Owner, Contractor, regulatory authorities, funding agency, or affected utilities.

PART 2 – PRODUCTS (not used)

PART 3 – EXECUTION (not used)

END OF SECTION 01 31 19.13

THIS PAGE INSERTED FOR CORRECT PAGINATION

SECTION 01 31 19.23

PROGRESS MEETINGS

PART 1 – GENERAL

1.01 SUMMARY

A. Section Includes: Requirements and procedures for progress meetings.

1.02 REQUIREMENTS FOR MEETINGS

A. Scheduling

1. Progress Meetings: Schedule by Owner, Engineer, or Contractor as deemed necessary by any of the parties.
2. Special Meetings: Scheduled by Owner, Engineer, or Contractor as applicable to purpose of meeting.

B. Location of Meetings: Offices of Owner.

1.03 PROGRESS MEETINGS

A. Purpose:

1. Review progress of Work;
2. Review submittal status;
3. Facilitate coordination;
4. Discuss changes; and
5. Resolve problems which may develop.

B. Attendance:

1. Contractor;
2. Subcontractors as appropriate to agenda;
3. Suppliers as appropriate to agenda;
4. Owner;
5. Engineer;
6. Sub-consultants as appropriate to agenda; and
7. Representatives of regulatory authorities, funding agency, and affected utilities as appropriate to agenda.

C. Minimum Agenda

1. Review progress of Work.
2. Field observations, problems, and decisions.
3. Identification of problems which impede planned progress.
4. Review of submittals schedule and status of submittals.

5. Review of off-site fabrication and delivery schedules.
6. Maintenance of progress schedule.
7. Corrective measures to regain projected schedules.
8. Planned progress during succeeding work period.
9. Coordination of projected progress.
10. Effect of proposed changes on progress schedule and coordination.
11. Record drawing status.
12. Other business relating to Work.

D. Schedule: As required by Owner, Engineer, or Contractor.

E. Minimum Notification: Four days in advance of meeting date.

1.04 SPECIAL MEETINGS

A. Purpose: Avoid or resolve problems relative to scheduling, coordination, or both.

B. Attendance:

1. Contractor;
2. Subcontractors as appropriate to agenda;
3. Suppliers as appropriate to agenda;
4. Owner;
5. Engineer;
6. Subconsultants as appropriate to agenda; and
7. Representatives of regulatory authorities, funding agency, and affected utilities as appropriate to agenda.

C. Agenda: As applicable to issues to be discussed.

D. Schedule: As required by Owner, Engineer, or Contractor.

E. Minimum Notification: Four days in advance of meeting date.

PART 2 – PRODUCTS (not used)

PART 3 – EXECUTION (not used)

END OF SECTION 01 31 19.23

THIS PAGE INSERTED FOR CORRECT PAGINATION

SECTION 01 32 16

PROGRESS SCHEDULES

PART 1 – GENERAL

1.01 SUMMARY

A. Section Includes: Procedures for preparation and submittal of construction Progress Schedules and periodical updating.

1.02 SUBMITTALS

A. General: as specified in:

1. Section 01 33 00 Submittal Procedures; and
2. This Section.

B. Preliminary Schedule of Work: Submit Preliminary Schedule of Work (Estimated Progress Schedule) as specified in the General Conditions. Following Schedule Review Meeting, resubmit Preliminary Schedule of Work as specified in the General Conditions.

C. Progress Schedules: Submit Progress Schedule with each Application for Payment. Identify changes since previous Progress Schedule submittal.

1.03 DISTRIBUTION

A. Distribute copies of reviewed Schedules to job site file, subcontractors, suppliers, and other concerned entities.

B. Instruct recipients to promptly report, in writing, problems anticipated by projections shown in Schedules.

1.04 FORMAT

A. Prepare Schedules as a horizontal bar chart or other format acceptable to the Engineer.

B. Provide separate identification for each major portion of Work or operation, identifying first work day of each week.

A. Submit printed or plotted schedule. Paper size shall not exceed 18 x 24 inches.

B. Submit schedule in electronic *.pdf format.

1.05 CONTENT

A. Show complete sequence of construction by activity, with dates for beginning and completion of each element of construction.

B. Identify work of separate stages and other logically grouped activities.

C. Show accumulated percentage of completion of each item, and total percentage of Work completed, as of the first day of each month.

D. Coordinate content with the Bid Schedule in the Contractor's Proposal for unit price contracts. Coordinate content with Section 01 29 73 Schedule of Values for lump sum contract.

1.06 REVISIONS TO SCHEDULES

A. Indicate progress of each activity to date of submittal, and projected completion date of each activity.

B. Identify activities modified since previous submittal, major changes in scope, and other identifiable changes.

C. Provide narrative report to define problem areas, anticipated delays, and impact on Schedule. Report corrective action taken, or proposed, and its effect.

PART 2 – PRODUCTS (not used)

PART 3 – EXECUTION (not used)

END OF SECTION 01 32 16

SECTION 01 33 00

SUBMITTAL PROCEDURES

PART 1 – GENERAL

1.01 SUMMARY

A. Section Includes: Requirements and procedures for submittals.

1.02 GENERAL

A. Submittals shall meet the requirements of the General Conditions and Supplementary Conditions.

1.03 SCHEDULE

A. Submit Preliminary Schedule of Shop Drawings and Samples prior to the Preconstruction Conference.

B. Within 10 days after Preconstruction Conference, submit the revised Schedule of Shop Drawings (including product data) and Samples.

C. Transmit submittals in accordance with approved Progress Schedule, and in such sequence to avoid delay in the Work or work of other contracts.

1.04 TRANSMITTAL

A. Transmit each item under Engineer-accepted transmittal form or letter.

B. Identify Project by title and number.

C. Number each transmittal.

D. Deliver or forward electronic submittals to Engineer at ross.hackethal@tkwonline.com

1.05 CONTENTS

A. Identify contents of submittal.

B. State purpose of submittal.

C. Identify variations from Contract Documents.

D. Identify product or system characteristics which may effect performance of the completed Work.

1.07 RESUBMITTAL

A. After Engineer review of submittal, revise and resubmit as required.

B. Identify resubmittal as a resubmittal and reference previous submittal.

C. Identify changes made since previous submittal.

1.08 DISTRIBUTION

A. Distribute copies of reviewed submittals to concerned persons.

B. Instruct recipients to promptly report any inability to comply with provisions.

PART 2 – PRODUCTS (not used)

PART 3 – EXECUTION (not used)

END OF SECTION 01 33 00

SECTION 01 33 23

SHOP DRAWINGS, PRODUCT DATA, AND SAMPLES

PART 1 – GENERAL

1.01 SUMMARY

A. Section Includes: Requirements and procedures for shop drawings, product data, and samples.

1.02 TRANSMITTAL OF SHOP DRAWINGS, PRODUCT DATA, AND SAMPLES

A. General: As specified in:

1. Section 01 33 00 Submittal Procedures; and
2. This Section.

B. Identify:

1. Project;
2. Contractor;
3. Subcontractor, as applicable to submittal;
4. Major supplier, as applicable to submittal;
5. Pertinent Drawing sheet and detail number;
6. Specification Section number as appropriate; and
7. Identify deviations from Contract Documents.

B. Coordinate submittals into logical groupings to facilitate interrelation of the several items:

1. Finishes which involve Engineer selection of colors, textures, or patterns.
2. Associated items which require correlation for efficient function or for installation.

1.03 SHOP DRAWINGS AND PRODUCT DATA

A. Shop Drawings, General

1. Present in a clear and thorough manner. Title each drawing with Project name and number. Transmittal letter shall reference item as listed on Submittal Schedule. Identify each element of drawings by reference to sheet number and specification section of Contract Documents.
2. Identify field dimensions; show relation to adjacent or critical features or Work or products.
3. Provide space for Contractor and Engineer review stamps. Shop drawing submittals that do not include sufficient space for Contractor and Engineer review stamps will be returned for revision and resubmittal without review.

B Product Data, General

1. If product data submittals include manufacturers' brochures or other published data, all copies shall be as published. Do not submit machine copies of manufacturer's published data.
2. Submit only pages which are pertinent. Mark or highlight each copy of standard printed data to identify pertinent products. Show reference standards, performance characteristics, and capacities; wiring and piping diagrams and controls; component parts; finishes; dimensions; and required clearances.
3. Modify manufacturer's standard schematic drawings and diagrams to supplement standard information and to provide information specifically applicable to the Work. Delete information not applicable.
4. Provide space for Contractor and Engineer review stamps. If there is not sufficient space on manufacturers' brochures or other published data for Contractor and Engineer review stamps, attach page, or sheet, for Contractor and Engineer review stamps. Include identification of brochure or other published data on attached page, or sheet. Product data submittals that do not include sufficient space for Contractor and Engineer review stamps will be returned for revision and resubmittal without review.

C. Shop Drawings and Product Data for Equipment

1. Include the following in each Shop Drawing and Product Data submittal:
   a. Specification Section number;
   b. Catalog data including the following:
      1) Specifications;
      2) Intended Service;
      3) Illustrations in sufficient detail to serve as a guide for assembly and disassembly;
      4) Parts schedule identifying materials to be used for various components and accessories;
   c. Materials of construction;
   d. Dimensions;
   e. Coatings;
   f. Additional information required to evaluate the proposed equipment's compliance with the Contract Documents.
   g. Additional data specified in individual specification sections relating to equipment.

1.04 CONTRACTOR REVIEW

A. Review submittals prior to transmittal; determine and verify field measurements, field construction criteria, manufacturer's catalog numbers, and conformance of submittal with requirements of Contract Documents.

B. Coordinate submittals with requirements of Work, Contract Documents, and Project Schedule.

C. Sign each sheet of shop drawings and product data, and each sample label to certify compliance with requirements of Contract Documents. Notify Engineer in writing at time of submittal, of any deviations from requirements of Contract Documents.

D. Do not fabricate products or begin work which requires submittals until return of submittal with Engineer acceptance.

1.05 ENGINEER REVIEW

A. Engineer will review shop drawings, product data, and samples and return submittals within 21 calendar days of Engineer's receipt under normal circumstances.

B. Engineer will notify Contractor if additional review time is required.

1.06 RESUBMITTALS

A. Make resubmittals under procedures specified for initial submittals.

B. Identify resubmittal as a resubmittal and reference previous submittal.

C. Identify changes made since previous submittal.

1.07 DISTRIBUTION

A. Distribute reproductions of shop drawings and copies of product data which bear Engineer's review stamp, to job site file, Record Documents file, subcontractors, suppliers, and other entities requiring information.

PART 2 – PRODUCTS (not used)

PART 3 – EXECUTION (not used)

END OF SECTION 01 33 23

SECTION 01 35 53

SECURITY

PART 1 – GENERAL

1.01 SUMMARY

A. Section Includes: Requirements for project site security.

1.02 SITE SECURITY

A. Site Not Occupied by Owner: The Contractor shall be fully responsible for security of construction area until is partially or fully occupied by Owner.

B. Facilities Partially Occupied by Owner:

1. Site Security: Site security of partially occupied sites shall be joint responsibility of Contractor and Owner.

a. Contractor shall provide security for the following:

1) Construction equipment, products, small tools, and other items related to construction;

2) New facilities under construction;

1.03 SECURITY PROGRAM

A. Protect Work from theft, vandalism, and unauthorized access or entry.

B. Maintain program throughout construction period until Owner acceptance precludes the need for Contractor security.

1.04 ENTRY CONTROL

A. Restrict entrance of persons and vehicles into Project site and existing facilities.

B. Owner will control entrance of persons and vehicles related to Owner's operations.

PART 2 – PRODUCTS (not used)

PART 3 – EXECUTION (not used)

END OF SECTION 01 35 53

SECTION 01 41 00

REGULATORY REQUIREMENTS

PART 1 – GENERAL

1.01 SUMMARY

A. Section Includes: Requirements and procedures for obtaining permits and complying with permits

B. Fees

1. Contractor

a. Costs for permit fees and inspections required for permits obtained by the Contractor shall be paid by the Contractor.

b. Costs for inspection feed shall be included in the Bid. Costs for inspection fees shall be included in the applicable items in the Schedule of Values

1.02 PERMITS

A. Contractor shall obtain Municipal, County, State and Federal permits not obtained by Owner, including but not limited to the following:

1. Applicable Local Permits.

2. Florida Department of Environmental Protection Notice of Intent for NPDES General Permit for Construction Activities.

2. Stormwater Pollution Prevention Plan.

3. Water Management District dewatering permits.

B. Engineer will obtain the following permits:

1. Department of Health, Notice of Intent To Use The General Permit For Construction Of Water Main Extensions For Potable Water Services Permit;

2. Florida Department of Environmental Protection, Notice of Intent To Use An Environmental Resource General Permit;

3. City of North Port Utilities and engineering approvals;

C. Documents:

1. Owner will furnish signed and sealed sets of Contract Documents for permit applications.

2. Owner will furnish copies of permits.

3. Contractor shall furnish copies of permits obtained by the Contractor. Forward copies of permits to the Engineer prior to commencement of work requiring permits.

1.03 SUBMITTALS

A. General: As specified in:

1. Section 01 33 00 Submittal Procedures;
2. Section 01 33 23 Shop Drawings, Product Data, and Samples; and
3. This Section.

B. Contractor shall submit electronic copies of any permits obtained by Contractor.

1.04 CODES

A. Codes applicable to this project include, but are not necessarily limited to, the following:

1. Florida Building Code.
2. Title 29, Part 1926, Construction Safety and Health Regulations, Code of Federal Regulations (OSHA), including all changes and amendments thereto.
3. Title 29, Part 1910, Occupational Safety and Health Standards, Code of Federal Regulations (OSHA), including all changes and amendments thereto.
4. Accessibility Requirements Manual, Department of Community Affairs, Florida Board of Building Codes and Standards.
5. The Americans with Disabilities Act (ADA) 1990 36 CFR Part 1191 Architectural and Transportation Barriers Compliance Requirements.
6. NFPA 101 Life Safety Code.
7. Standard Fire Prevention Code.
8. State Fire Marshal's Uniform Fire Safety Rules.

B. If there is a conflict in regulations, codes, or regulations and codes, the more stringent requirements shall govern.

PART 2 – PRODUCTS (not used)

PART 3 – EXECUTION

3.01 VERIFICATION AND CONFORMANCE

A. Verify that all permits which Owner is required to obtain have been obtained. Copies of these permits will be made available to the Contractor.

B. Obtain all permits Contractor is responsible for obtaining.

C. Conform to all requirements of each permit.

3.02 PERMIT DISPLAY

A. Display all permits obtained by Owner and by Contractor that are required to be displayed at the project site.

B. Display each permit in conformance with the requirements of the regulatory authority that issued the permit.

3.03 DREDGE AND FILL PERMITS

A. The appropriate office of the Florida Department of Environmental Protection shall be notified in writing 48 hours prior to commencement of work in areas covered by Dredge and Fill Permits.

B. Construction in the following areas shall be done during the months of September through April:

   1.

C. If historical or archaeological artifacts, such as Indian canoes, are discovered at any time within the project site the permittee shall immediately notify the Florida Department of Environmental Protection district office and the Bureau of Historic Preservation.

D. Spoil shall be placed on a self-contained upland spoil site to prevent any sedimentation or turbid runoff into waters of the State of Florida.

E. Do not dewater channels. If project site conditions require channels to be dewatered or diked, the Contractor shall submit complete plans and methods to the Engineer for review, modification as necessary, and approval prior to dewatering or diking channels.

F. Exposed fill slopes above MHW shall be stabilized within 72 hours of final grading to prevent erosion, sedimentation, and erosion into waters of the State.

G. If wetland area is damaged by project works, the wetland area shall be restored to natural grades and revegetated with wetland plant species that existed in the crossing area prior to construction. Project site shall have 80% coverage by endemic wetland plants, native to the area, within two years of final planting.

   1. Recommended plant species include, but are not necessarily limited to the following:

      a. Leather fern;

      b. Pickerelweed;

      c. Arrowhead;

   2. If cypress or other wetland trees are destroyed, the cypress, other wetland trees, or cypress and other wetland trees shall be replaced on a 2 for 1 basis with 80% survival over five years. These plantings shall have a minimum three-foot height.

H. All other crossing areas shall be restored to original grade prior to stabilization within 72 hours after installation of the utility line segment at each wetland crossing.

I. The permittee shall submit notice, in writing to the appropriate Florida Department of Environmental Protect office, within 72 hours of the following events:

   1. Commencement of construction in each crossing area.
   2. Completion of construction and stabilization in each area.
   3. Completion of the area 2-1 plantings.

J. The project shall meet the requirements of applicable State Water Quality Standards including the following:

   1. 17-3.051 - Minimum Criteria for All Waters at All Times and All Places.
   2. 17-3.061 - Surface Waters: General Criteria.
   3. 17-3.121 - Criteria - Class III Waters - Recreation, Propagation and Management of Fish and Wildlife: Surface Waters.

END OF SECTION 01 41 00

SECTION 01 42 19

REFERENCE STANDARDS

PART 1 – GENERAL

1.01 SUMMARY

A. Section Includes

1. Requirements relative to reference publications; and
2. Schedule of Standards Organizations.

1.02 REFERENCE PUBLICATIONS

A. References to standards, specifications, manuals, or codes of any technical society, organization or association, or to the Laws or Regulations of any government authority, whether such reference be specific or by implication, shall mean the latest standard, specification, manual, code, or Laws or Regulations in effect at the time of opening of Bids (or, on the Effective Date of the Agreement if there were no Bids), except as may be otherwise specifically stated in the Contract Documents.

B. Reporting and resolving discrepancies relative to reference publications shall be as specified in the General Conditions.

C. Document precedence shall be as specified in the General Conditions.

1.03 SCHEDULE OF STANDARDS ORGANIZATIONS

AA	Aluminum Association
AAMA	Architectural Aluminum Manufacturer's Association
AAN	American Association of Nurserymen, Inc.
AASHTO	American Association of State Highway and Transportation Officials
ACI	American Concrete Institute
ACPA	American Concrete Pipe Association
AFBMA	Anti-Friction Bearing Manufacturer's Association, Inc.
AGC	Associated General Contractors of America
AGMA	American Gear Manufacturer's Association
AHGDA	American Hot Dip Galvanizers Association
AI	Asphalt Institute
AIA	American Institute of Architects
AISC	American Institute of Steel Construction
AISI	American Iron and Steel Institute
AITC	American Institute of Timber Construction
AMCA	Air Moving and Conditioning Association

ANSI	American National Standards Institute
APA	American Plywood Association
API	American Petroleum Institute
APHA	American Public Health Association
APWA	American Public Works Association
AREA	American Railway Engineering Association
ASA	Acoustical Society of America
ASAE	American Society of Agriculture Engineers
ASCE	American Society of Civil Engineers
ASHRAE	American Society of Heating, Refrigerating, and Air-Conditioning Engineers
ASLE	American Society of Lubricating Engineers
ASME	American Society of Mechanical Engineers
ASMM	Architectural Sheet Metal Manual
ASSE	American Society of Sanitary Engineers
ASTM	American Society for Testing and Materials
AWPA	American Wood-Preservers' Association
AWPI	American Wood Preservers Institute
AWWA	American Water Works Association
AWS	American Welding Society
BHMA	Builders Hardware Manufacturer's Association
CMA	Concrete Masonry Association
CRSI	Concrete Reinforcing Steel Institute
DIPRA	Ductile Iron Pipe Research Association
EIA	Electronic Industries Association
EJCDC	Engineers' Joint Contract Documents Committee
EPA	Environmental Protection Agency
ETL	Electrical Test Laboratories
FDEP	Florida Department of Environmental Protection
FDOT	Florida Department of Transportation
FM	Factory Mutual
FS	Federal Specification General Services Administration Specification and Consumer Information Distribution Section (WFSIS)
IEEE	Institute of Electrical and Electronics Engineers
IES	Illuminating Engineering Society
IMIAC	International Masonry Industry All-Weather Council

IPCEA	Insulated Power Cable Engineers Association
ISA	Instrument Society of America
ISO	International Organization for Standardization
MBMA	Metal Building Manufacturer's Association
MSS	Manufacturer’s Standardization Society
MTI	Marine Testing Institute
NAAMM	National Association of Architectural Metal Manufacturers
NACE	National Association of Corrosion Engineers
NBS	National Bureau of Standards
NEC	National Electric Code
NEMA	National Electrical Manufacturers' Association
NFRC	National Fenestration Rating Council
NFPA	National Fire Protection Association
NRCA	National Roofing Contractor's Association
NSF	NSF International
OSHA	Occupational Safety and Health Administration
PCA	Portland Cement Association
PS	Product Standard
SBC	Standard Building Code
SDI	Steel Door Institute
SJI	Steel Joist Institute
SMACCNA	Sheet Metal and Air Conditioning Contractors National Association
SSPC	Steel Structures Painting Council
SSPWC	Standard Specifications for Public Works Construction
UL	Underwriter's Laboratories, Inc.

PART 2 – PRODUCTS (not used)

PART 3 – EXECUTION (not used)

END OF SECTION 01 42 19

THIS PAGE INSERTED FOR CORRECT PAGINATION

SECTION 01 45 16.13

CONTRACTOR'S QUALITY CONTROL PROCEDURES

PART 1 – GENERAL

1.01 SUMMARY

A. Section Includes: Requirements for Contractor's quality control.

1.02 GENERAL QUALITY CONTROL

A. Maintain quality control over suppliers, manufacturers, products, services, site conditions, and workmanship, to produce work of specified quality.

1.03 WORKMANSHIP

A. Comply with industry standards except when more restrictive tolerances or specified requirements indicate more rigid standards or more precise workmanship.

B. Perform work by persons qualified to produce workmanship of specified quality.

C. Secure products in place with positive anchorage devices designed and sized to withstand stresses, vibration, and rocking.

1.04 MANUFACTURERS' INSTRUCTIONS

A. Comply with instructions in full detail, including each step in sequence.

B. Request clarification from Engineer before proceeding if instructions conflict with Contract Documents.

1.05 MANUFACTURERS' CERTIFICATES

A. Submit manufacturer's certificate that products meet or exceed specified requirements.

1.06 MANUFACTURERS' FIELD SERVICES (not used)

PART 2 – PRODUCTS (not used)

PART 3 – EXECUTION (not used)

END OF SECTION 01 45 16.13

THIS PAGE INSERTED FOR CORRECT PAGINATION

SECTION 01 45 29

TESTING LABORATORY SERVICES

PART 1 – GENERAL

1.01 SUMMARY

A. Section Includes: Requirements and procedures for testing laboratory services.

B. Payment Procedures

1. Contractor shall employ and pay for services of an independent testing laboratory to perform specified inspection and testing.

2. Employment of testing laboratory by Contractor shall in no way relieve Contractor of obligation to perform work in accordance with requirements of Contract Documents.

1.02 REFERENCES

A. General: References to standards, specifications, manuals, or codes of any technical society, organization or association, or to the Laws or Regulations of any government authority, whether such reference be specific or by implication, shall mean the latest standard, specification, manual, code, or Laws or Regulations in effect at the time of opening of Bids (or, on the Effective Date of the Agreement if there were no Bids), except as may be otherwise specifically stated in the Contract Documents.

B. ANSI/ASTM Standards

1. ANSI/ASTM D3740 — Practice for Evaluation of Agencies Engaged in Testing and/or Inspection of Soil and Rock as Used in Engineering Design and Construction

2. ANSI/ASTM E329 — Practice for Inspection and Testing Agencies for Concrete, Steel, Bituminuous Materials as Used in Construction

1.03 SUBMITTALS

A. General: As specified in:

1. General Conditions;

2. Section 01 33 00 Submittals;

3. This Section.

B. Prior to start of Work, submit testing laboratory name, address, and telephone number, name of responsible officer, and name of full time registered Engineer and/or specialist, as appropriate to testing services performed.

C. Submit inspection reports and test reports.

1.04 LABORATORY QUALITY ASSURANCE

A. Testing laboratory shall meet the requirements of ANSI/ASTM E329, ANSI/ASTM D3740, or ANSI/ASTM E329 and ANSI/ASTM D3740, as appropriate to laboratory services.

B. Testing laboratory shall be authorized to operate in the State of Florida.

C. Testing laboratory shall maintain a full time registered Engineer and/or specialist, as appropriate to testing services performed, on staff to review services.

D. Testing laboratory shall calibrate testing equipment at reasonable intervals with devices of an accuracy traceable to either National Bureau of Standards (NBS) Standards or accepted values of natural physical constants.

1.05 LABORATORY RESPONSIBILITIES

A. Test samples of materials and mixes submitted by Contractor.

B. Provide qualified personnel at site. Cooperate with Engineer and Contractor in performance of services.

C. Perform specified inspection, sampling, and testing of products in accordance with specified standards.

D. Ascertain compliance of materials and mixes with requirements of Contract Documents.

E. Promptly notify Engineer and Contractor of observed irregularities or non-conformance of Work or products.

F. Perform additional inspections and tests required by Engineer.

G. Attend preconstruction conferences and progress meetings.

1.06 LABORATORY REPORTS

A. After each inspection and test, promptly submit an electronic copy to the engineer, owner and contractor of laboratory report.

B. Include:

1. Date issued,
2. Project title and number,
3. Name of inspector,
4. Date and time of sampling or inspection,
5. Identification of product and Specifications section,
6. Location in the Project,
7. Type of inspection or test,
8. Date of test,
9. Results of tests,
10. Conformance with Contract Documents.

C. When requested by Engineer, provide interpretation of test results.

1.07 LIMITS ON TESTING LABORATORY AUTHORITY

A. Laboratory may not release, revoke, alter, or enlarge on requirements of Contract Documents.

B. Laboratory may not approve or accept any portion of the Work.

C. Laboratory may not assume any duties of Contractor.

D. Laboratory has no authority to stop the Work.

1.08 CONTRACTOR RESPONSIBILITIES

A. Deliver to laboratory, at designated location, adequate samples of proposed materials which require testing, along with proposed mix designs.

B. Cooperate with laboratory personnel. Provide access to the Work. Provide access to manufacturer's facilities, if testing, or testing observation, within manufacturer's facility is required by the Contract Documents.

C. Provide incidental labor and facilities to provide access to Work to be tested, to obtain and handle samples at the site or at source of Products to be tested, to facilitate tests and inspections, storage and curing of test samples.

D. Notify Engineer and laboratory 24 hours prior to expected time for operations requiring inspection and testing services.

E. Pay costs of testing laboratory services as specified in this Section.

1.09 SCHEDULE OF INSPECTIONS AND TESTS

A. As specified in individual Sections or Reference Standards, as appropriate.

1.10 SAMPLE PICK-UP AND DELIVERY

A. Samples of materials collected at Project site to be tested by laboratory shall be picked up at the Project site and delivered to the laboratory, at designated location, by Contractor’s personnel or laboratory personnel, as appropriate to the agreement between the Contractor and the laboratory.

B. Contractor shall make arrangements for adequate samples from off-site sources, which require laboratory testing, to be delivered to project site or to laboratory, at designated location, as appropriate to the agreement between the Contractor and the laboratory.

PART 2 – PRODUCTS (not used)

PART 3 – EXECUTION (not used)

END OF SECTION 01 45 29

THIS PAGE INSERTED FOR CORRECT PAGINATION

SECTION 01 51 00

TEMPORARY UTILITIES

PART 1 – GENERAL

1.01 SUMMARY

A. Section Includes: Requirements for temporary utilities.

1.02 TEMPORARY SERVICES

A. Each temporary service shall meet the requirements of the utility having authority over the temporary service. Provide metering and isolation to meet requirements of utility authority over temporary service.

B. Obtain permission of utility having authority over temporary service prior to connecting temporary service.

C. Remove temporary services after temporary services are no longer needed for construction operations, site security, field offices, or testing.

1.03 APPLICATION AND PAYMENT FOR TEMPORARY SERVICES

A. Make applications and arrangements and pay fees and charges for the following temporary services:

1. Electrical service for the following:

a. Power for construction tools.

2. Potable water service for the following:

a. Construction operations.

b. Consumption by Contractor's and subcontractors' personnel.

3. Sanitary service for Contractor's and subcontractors' personnel.

4. Telephone service for the following:

a. Communications regarding construction operations.

b. Emergency services.

B. Provide and pay for temporary generators, pumps, wiring, switches, piping, connections, meters, and appurtenances for temporary utilities.

1.04 WATER

A. Provide temporary water services for the following:

1. Potable water, non-potable water, or both for construction operations.

2. Potable water for consumption by Contractor's and subcontractors' personnel.

3. Potable water for field offices.

B. Source of potable water shall be as follows:

1. Public utility providing potable water to the project site;
2. Potable water hauled to site in drinking water dispensers;
3. Bottled water.

C. Piping for Temporary Water Services

1. Provide pipe, fittings, valves, and hydrants for temporary water service, or services.
2. Provide temporary pumps, storage tanks, and controls if available water volume, pressure, or volume and pressure are not sufficient for construction operations.
3. Extend branch piping with outlets located so that water is available by use of hoses.
4. Securely anchor and support temporary water piping.
5. Provide warning signs at each temporary non-potable water outlet.

1.05 SANITARY FACILITIES

A. Provide temporary sanitary facilities for Contractor's and subcontractors' personnel.

B. Sanitary Facilities for Contractor's and Subcontractors' Personnel

1. Provide fixed toilets or portable chemical toilets for Contractor's and subcontractors' personnel.
2. Sanitary Facilities for Contractor's and Subcontractors' Personnel shall meet the requirements of OSHA Safety and Health Standards for Construction.
3. Seclude sanitary facilities from public observation as follows:
   a. Locate sanitary facilities so that sanitary facilities cannot be observed by public, or
   b. Provide screening around sanitary facilities so that sanitary facilities cannot be observed by public.
4. Maintain sanitary facilities so that sanitary facilities are clean and dry at all times.
5. Enforce use of sanitary facilities. Do not commit nuisances on the project site.

PART 2 – PRODUCTS (not used)

PART 3 – EXECUTION (not used)

END OF SECTION 01 51 00

THIS PAGE INSERTED FOR CORRECT PAGINATION

SECTION 01 55 00

ACCESS ROADS AND PARKING AREAS

PART 1 – GENERAL

1.01 SUMMARY

A. Section Includes: Requirements for project access roads and parking areas.

PART 2 – PRODUCTS

2.01 MATERIALS

A. Temporary Construction

1. Selected by Contractor, as required to support traffic loads for construction operations, Owner access for operation and maintenance of facilities in service, and emergency vehicles.
2. Temporary Surface:
   a. Granular surface may be used for short term, less than 30 days, temporary surfaces unless asphaltic concrete surface is required for dust control.
   b. Provide asphaltic concrete surface for the following conditions:
      1) Temporary surfaces that are to be used for more than 30 days.
      2) Dust control as specified in Section 01 57 00 Temporary Controls.

B. Temporary Surface Over Permanent Base: Equal to permanent surface.

C. Permanent Construction: As shown on the Drawings.

PART 3 – EXECUTION

3.01 PREPARATION

A. Clear areas to be used for temporary access roads and parking.

B. Provide drainage facilities, including retention areas and sediment control, for temporary access roads and parking.

3.02 ACCESS ROADS

A. Provide access roads for the following:

1. Construction operations;
2. Material and equipment delivery for construction;
3. Owner's access to facilities in service;
4. Owner's access to Owner's offices, shops, and storage areas;
5. Material and equipment delivery for Owner's operations and maintenance; and

6. Emergency access.

B. Construct temporary access roads on route, or routes, approved by Engineer.

1. Provide maximum driveway width feasible (up to 20 feet) along approved access route.

2. Access drives shall have load bearing capacity to provide unimpeded traffic for construction operations, Owner access for operation and maintenance of facilities in service, and emergency vehicles.

3. Construct temporary bridges and culverts to span low areas and allow unimpeded drainage.

4. Extend and relocate access drives as Work progress requires.

5. Provide detours as necessary for unimpeded traffic flow.

6. Provide turning space between and around combustible materials.

7. Provide and maintain access to the following:

a. Fire hydrants;

b. Facilities in service; and

c. Valves, switches, and controls for facilities in service.

3.03 PARKING

A. Provide temporary parking facilities for use by construction personnel, Owner's representative, and Engineer.

1. Provide parking on job site in areas designated and approved by Owner.

2. If on-site parking is not sufficient, for all construction personnel, provide additional parking off of the project site. Provide transportation to site from off-site parking if off-site parking is not within 1,500 feet walking distance from the project site.

B. Do not allow construction personnel to park in on-site areas that are not designated as parking areas for construction personnel.

C. Do not use temporary parking areas for storage of material or equipment to be incorporated in the Work, construction material, or construction equipment.

3.04 EXISTING PAVEMENTS AND PARKING AREAS

A. Project Site Access: Existing access drives to the project site may be used for access by construction traffic unless otherwise shown or specified.

B. Parking: Existing parking areas that are designated and approved for construction parking may be used for Contractor's and subcontractors' light vehicle parking and for parking by Owner's representative and Engineer.

C. Construction Equipment

1. Do not operate tracked vehicles beyond the limits of the construction site.

2. Do not allow heavy vehicles or construction equipment in existing parking areas that are not designated to be used for construction operations.

3.05 MAINTENANCE

A. Maintain traffic and parking areas.

B. Maintain traffic routes so that emergency vehicles can access the project site, operating facilities, and Owner occupied facilities at all times.

C. Maintain traffic routes and parking areas so that traffic routes and parking areas can be used for their intended purpose.

D. Maintain traffic routes and parking areas so that passenger cars can use the traffic routes and parking areas.

3.06 REMOVAL AND RESTORATION

A. Remove temporary access drives and parking that are not part of permanent Work.

B. Remove temporary surface, base, and subgrade.

1. Removal depth shall be as required to complete Work.

2. Minimum removal depth shall be two feet.

C. Replace removed surface, base, and subgrade as appropriate to completed Work.

END OF SECTION 01 55 00

THIS PAGE INSERTED FOR CORRECT PAGINATION

SECTION 01 55 26

TRAFFIC REGULATION

PART 1 – GENERAL

1.01 SUMMARY

A. Section Includes:

1. Traffic regulation for construction area.
2. Traffic regulation for haul routes and access routes.

1.02 TRAFFIC CONTROL STANDARDS

A. All design, application, installation, maintenance and removal of all traffic control devices and all warning devices and barriers which are necessary to protect the public and workmen from hazards within the project limits shall be as specified in the State of Florida, Manual of Traffic and Highway Construction, Maintenance and Utility Operations. And, applicable sections of the National "Manual of Uniform Traffic Control Devices" (MUTCD) established by the Federal Highway Administration.

B. Standards established in the aforementioned Manual constitute the minimum requirements for normal conditions. Additional traffic control devices, warning devices, barriers, or other safety devices shall be required where unusual, complex or particularly hazardous conditions exist.

1.03 CONSTRUCTION PARKING CONTROL

A. Control vehicular parking to prevent interference with the following:

1. Public traffic and parking.
2. Access by emergency vehicles.
3. Owner's operations.

B. Monitor parking of construction personnel's vehicles.

C. Prevent parking on or adjacent to roads within the project area.

1.04 CONSTRUCTION ACCESS AND HAUL ROUTES

A. Public streets that permit truck traffic and connect to the project site may be used for access by construction traffic.

B. Do not allow construction traffic on streets where truck traffic is prohibited by existing signs.

1.05 MAINTENANCE OF CONSTRUCTION ACCESS AND HAUL ROUTES

A. Clean haul vehicles prior to leaving job site if required to prevent dirt from being deposited on either access routes or haul routes.

B. Immediately remove dirt, debris, or dirt and debris deposited or spilled on access routes, haul routes, or access and haul routes.

C. Repair or replace pavement damaged by construction operations or movement of construction equipment or material.

PART 2 – PRODUCTS (not used)

PART 3 – EXECUTION (not used)

END OF SECTION 01 55 26

SECTION 01 56 00

BARRIERS AND ENCLOSURES

PART 1 – GENERAL

1.01 SUMMARY

A. Section Includes: Requirements for barriers and enclosures.

1.02 PROTECTION OF WORK

A. Comply with the "State of Florida Manual of Traffic Control and Safe Practices for Street and Highway Construction, Maintenance, and Utility Operations" and with the "Manual on Uniform Traffic Control Devices" and all other governing safety regulations.

B. Protect new work and existing work to remain.

C. Prohibit traffic and storage on waterproofed surfaces, on lawn areas, and on landscaped areas.

1.03 BARRIERS

A. Provide barriers for the following:

1. Prevent public entry to construction areas.
2. Protect existing facilities and adjacent properties from damage from construction operations.
3. Protect trees and plants to remain.

1.04 ENCLOSURES

A. Provide temporary weather-tight enclosures as required to protect new work.

B. Temporary enclosures shall:

1. Provide protection from weather
2. Provide acceptable working conditions and protection for materials including:
   a. Heating, cooling, or heating and cooling.
   b. Ventilation.
   c. Dust control.
   d. Lighting.

1.05 CLOSURES

A. Provide temporary weather-tight closures of openings in exterior surfaces.

B. Closures shall:

1. Provide acceptable working conditions and protection for materials.
2. Allow for temporary heating.

3. Prevent entry of unauthorized persons.

C. Provide doors with self-closing hardware and locks.

1.06 COVERINGS

A. Provide protective coverings over equipment, piping, conduit, and appurtenances.

B. Provide protective coverings at walls, projections, jambs, sills, and soffits of openings.

C. Protect finished floors and stairs from traffic, movement of heavy objects, and storage.

1.07 PROTECTION OF TREES AND SHRUBS

A. Protect trees, shrubs, and other plants against vehicular traffic, stored materials, dumping, chemically injurious materials, and puddling or continuous running water.

B. Do not damage or trim trees or shrubs not shown to be removed or trimmed.

C. Do not use spikes for climbing live trees not shown to be removed.

D. Replace trees and shrubs removed or destroyed if trees, shrubs, or trees and shrubs are not shown to be removed.

E. Replace or repair damaged trees, shrubs, or trees and shrubs.

F. Replace and repair trees and shrubs as specified in Section 32 01 90 Planting Restoration.

PART 2 – PRODUCTS (not used)

PART 3 – EXECUTION (not used)

END OF SECTION 01 56 00

SECTION 01 57 00

TEMPORARY CONTROLS

PART 1 – GENERAL

1.01 SUMMARY

A. Section Includes: Requirements for temporary controls.

1.02 WATER CONTROL

A. Regulatory Requirements

1. Meet regulatory requirements relative to dewatering and disposal of discharge water from dewatering.
2. Make application and arrangements and pay fees and charges for dewatering and disposal of discharge from dewatering

B. Dewatering Excavations and Trenches: Provide, operate, and maintain dewatering systems as specified in Section 31 23 19 Dewatering.

1.03 DUST CONTROL

A. Provide systems, construction methods, or both which control dust generation and dispersement.

B. Control dust from construction operations, construction traffic, and other traffic on the job site so that:

1. Site distance is not reduced below safe limits for construction operations and traffic.
2. Adjacent property and businesses are not damaged by dust from the project site.
3. Persons, animals, or persons and animals are not injured or killed by dust from the project site.
4. Dust from the project does not cause a nuisance to the Owner or persons in the vicinity of the project site.

1.04 EROSION AND SEDIMENT CONTROL

A. Plan and execute construction by methods to control surface drainage from cuts and fills, from borrow and waste disposal areas. Prevent erosion and sedimentation.

B. Minimize amount of bare soil exposed at one time.

C. Provide temporary measures such as berms, dikes, and drains, to prevent water flow.

D. Construct fill and waste areas by selective placement to avoid erosive surface silts or clays.

E. Periodically inspect earthwork to detect evidence of erosion and sedimentation; promptly apply corrective measures.

1.05 NOISE CONTROL

A. Provide systems, measures, or both so that noise from construction operations, equipment and traffic does not exceed levels permitted by local ordinances.

B. Control noise from construction operations, equipment and traffic so that:

1. Noise does not impede the performance of Owner's personnel at the project site.

2. Persons, animals, or persons and animals are not injured by noise from the project site.

3. Noise from the project does not cause a nuisance to the Owner or persons in the vicinity of the project site.

C. Provide hearing protection within the project site for Contractor's and subcontractors' personnel, Owner's personnel, and Engineer wherever noise levels exceed occupational exposure limits.

1.06 PEST CONTROL

A. Provide insect and rodent control for construction areas, staging area, storage area, field offices, and sheds.

B. Keep storage areas clean and neat.

C. Provide routine cutting of grass and weeds.

D. Instruct construction personnel on the prevention of bites from poisonous snakes and spiders when picking up materials and performing other tasks.

1.07 POLLUTION CONTROL

A. Provide methods, means, and facilities to prevent contamination of soil, water, and atmosphere from discharge of noxious substances, toxic substances, and pollutants produced by construction operations.

PART 2 – PRODUCTS (not used)

PART 3 – EXECUTION

3.01 USE OF CHEMICALS

A. Chemicals used during project construction or furnished for project operation, whether herbicide, pesticide, disinfectant, polymer, reactant or of other classification, must show approval of either EPA or USDA.

B. Use of chemicals and disposal of residues shall be in strict conformance with manufacturer's instructions, government regulations, or both, as applicable.

END OF SECTION 01 57 00

SECTION 01 61 00

BASIC PRODUCT REQUIREMENTS

PART 1 – GENERAL

1.01 SUMMARY

A. Section Includes: General requirements for products.

1.02 DEFINITIONS

A. Products: Products include material, equipment, systems, fabrications, and mixes.

B. Size: Pipe, fittings, and valve sizes and references to pipe diameter on the Drawings and in the Specifications are intended to be nominal size or diameter, and shall be interpreted as nominal size or diameter.

1.03 QUALITY ASSURANCE

A. Specification Section: Products shall meet the requirements of individual Sections in these Specifications.

B. Reference Standards: Products shall comply with referenced standards as minimum requirements.

C. Products Supplied in Quantity: Components required to be supplied in quantity within a Specification section shall be the same, and shall be interchangeable.

1.04 WARRANTIES

A. Submit manufacturers' warranties as published in manufacturers' literature and specified to be provided in individual Sections.

PART 2 – PRODUCTS

2.01 PRODUCTS, GENERAL

A. All manufactured and fabricated products shall be new and unused unless otherwise noted on the Drawings or specified.

PART 3 – EXECUTION (not used)

END OF SECTION 01 61 00

THIS PAGE INSERTED FOR CORRECT PAGINATION

SECTION 01 62 00

PRODUCT OPTIONS

PART 1 – GENERAL

1.01 SUMMARY

A. Section Includes: Requirements for options in selecting products.

1.02 PRODUCT OPTIONS

A. For products specified by reference standards or by descriptions only, any product meeting those standards can be submitted for approval.

B. For products specified by naming one or more manufacturers with a provision for substitutions, by stating "or equal", "or approved equal" or similar words, submit a request for substitution for any equal product from manufacturer not specifically named.

C. For products specified by naming one or more manufacturers without a provision for substitutions and without a statement that no substitution is permitted, submit a request for substitution for any equal product from manufacturer not specifically named.

D. For products specified by naming one or more manufacturers and a statement that no substitution is permitted, furnish products named and do not submit a request for substitution.

PART 2 – PRODUCTS (not used)

PART 3 – EXECUTION (not used)

END OF SECTION 01 62 00

THIS PAGE INSERTED FOR CORRECT PAGINATION

SECTION 01 65 00

PRODUCT DELIVERY REQUIREMENTS

PART 1 – GENERAL

1.01 SUMMARY

A. Section Includes: Requirements for product delivery.

1.02 DELIVERY

A. Contractor shall be responsible for delivery of products.

1.03 PROJECT/SITE CONDITIONS

A. Regulatory Requirement: Comply with requirements of Federal, State, and local authorities regulating shipment of products.

B. Environmental Requirements

1. Do not load or unload products when weather could result in damage to product or create hazardous conditions for personnel loading or unloading products.
2. Load or unload products within enclosed buildings if required to prevent damage to products.

PART 2 – PRODUCTS

2.01 PRODUCTS, GENERAL

A. Products shall be as specified in Section applicable to products.

PART 3 – EXECUTION

3.01 PACKING

A. Products shall be boxed, crated, or otherwise protected from damage and moisture during shipment. Products shall be protected from exposure to corrosive fumes and shall be kept thoroughly dry during shipment.

B. Meet requirements for packing equipment specified in individual Sections covering products.

3.02 SHIPPING

A. Contractor shall promptly inspect shipments to assure that products comply with requirements, quantities are correct, and products are undamaged.

3.03 UNLOADING

A. Contractor shall unload products. Contractor shall provide personnel and equipment as required to unload products.

B. Do not unload damaged products. Promptly remove damaged products from the job site. Replace damaged products with undamaged products.

C. Unload equipment and appurtenances by hoists or skidding. Unload fabricated assemblies and other products too large or bulky for manual handling by hoists or skidding Do not drop products. Do not skid or roll products on or against other products. Pad slings and hooks in a manner which prevents damage to products.

END OF SECTION 01 65 00

SECTION 01 66 00

PRODUCT STORAGE AND HANDLING REQUIREMENTS

PART 1 – GENERAL

1.01 SUMMARY

A. Section Includes: Requirements for product storage and handling

1.02 PRODUCT STORAGE, AND HANDLING

A. Contractor shall be responsible for the storage and handling of products.

1.03 PROJECT/SITE CONDITIONS

A. Regulatory Requirements: Comply with requirements of Federal, State, and local authorities regulating storage facilities.

B. Environmental Requirements

1. Provide covered, enclosed, or covered and enclosed storage facilities for products that can be damaged or deteriorated by exposure to sunlight, rainfall, or other conditions.

2. Provide climate controlled storage facilities for products that can be damaged by heat, humidity, condensation, or other conditions that could occur in a non-climate controlled environment.

PART 2 – PRODUCTS (not used)

PART 3 – EXECUTION

3.01 GENERAL

A. Meet requirements for storage and handling specified in individual Sections covering products.

B. Promptly remove damaged products from the job site. Replace damaged products with undamaged products.

3.02 PRODUCT HANDLING

A. Handle equipment and appurtenances by hoists or skidding. Pad slings and hooks in a manner which prevents damage to products.

B. Do not drop products.

C. Do not skid or roll products on or against other products.

3.03 PRODUCT STORAGE

A. Store products in accordance with manufacturer's instructions, with seals and labels intact and legible.

B. Store sensitive products in weather-tight enclosures; maintain within temperature and humidity ranges required by manufacturer's instructions. Store products which will be deteriorated by sunlight in a cool location out of direct sunlight. Rubber products shall not come in contact with petroleum products.

C. Place fabricated products, stored out-of-doors, on sloped supports above ground. Cover products subject to deterioration with impervious sheet covering and as recommended by manufacturer; provide ventilation which avoids condensation.

D. Store equipment having moving parts, such as gears, bearings, and electric motors, in a temperature and humidity controlled area until equipment is installed and permanent HVAC systems are in operation. Store instruments, control panels, motor control centers, and switchgear in a temperature and humidity controlled area until instruments, control panels, motor control centers, and switchgear are installed and permanent HVAC systems are in operation.

E. Stored electric motors with space heaters shall have the space heaters energized unless the motors are stored in a temperature and humidity controlled area. When electric motors with space heaters are installed, the space heaters shall be connected and energized. Space heaters shall remain energized until equipment is accepted and placed in service.

F. Arrange storage to provide access for inspection. Periodically inspect stored products to assure products are undamaged, and are maintained under required conditions.

END OF SECTION 01 66 00

SECTION 01 71 23

FIELD ENGINEERING

PART 1 – GENERAL

1.01 SUMMARY

A. Section Includes:

1. Requirements for Professional Surveying services.
2. Requirements for record documents.

1.02 QUALITY CONTROL

A. Land Surveyor: Registered in the State of Florida and acceptable to Engineer.

1.03 SUBMITTALS

A. General: as specified in:

1. Section 01 33 00 Submittal Procedures; and
2. This Section.

B. Survey Services

1. Submit name, address, and telephone number of Surveyor before starting work.
2. On request, submit documentation verifying accuracy of survey work for project boundary and vertical and horizontal control.
3. Submit certificate signed by Surveyor, certifying that elevations and locations of improvements are in conformance, or non-conformance, with Contract Documents.

1.04 PROJECT RECORD DOCUMENTS

A. Maintain complete, accurate log of control and survey work as it progresses.

B. Maintain one set of plans that is clearly marked to show all record drawing information. These plans shall show the record information within one week of installation of work or information being made available. Record Drawings will be available for review by the Engineer at any time during the normal work day.

C. Submit Record Documents under provisions of Section 01 77 00 Contract Closeout.

PART 2 – PRODUCTS (not used)

PART 3 – EXECUTION

3.01 INSPECTION

A. Verify locations of survey control points prior to starting work.

B. Promptly notify Engineer of any discrepancies discovered.

3.02 SURVEY REFERENCE POINTS

A. Protect survey control points prior to starting site work; preserve permanent reference points during construction. Make no changes without prior written notice to, and approval of, Engineer.

B. Promptly report to Engineer the loss or destruction of any reference point or relocation required because of changes in grades or other reasons. Replace dislocated survey control points based on original survey control at no additional cost to the Owner.

3.03 SURVEY REQUIREMENTS

A. Engineer shall provide one bench mark for vertical control and two reference points for horizontal control during construction. The bench mark and one of the two reference points may be the same point. Contractor shall be responsible for laying out the work, shall protect and preserve the established bench mark and reference points. Contractor shall make no changes or relocations without prior approval of Owner. Contractor shall report to Engineer whenever any bench mark or reference point is lost or destroyed or requires relocation because of necessary changes in grades or locations, and shall be responsible for the accurate replacement or relocation of such reference points by professionally qualified personnel.

B. Surveyor shall establish line and levels, locate and lay out improvements by survey instrumentation and similar appropriate means:

1. Site improvements, including pavements, stakes for grading, fill and topsoil placement, utility locations, slopes, and invert, or centerline, elevations.
2. Grid or axis for buildings, structures, and tanks.
3. Elevations for buildings, structures, and tanks.
4. Piping locations, slopes, and invert, or centerline, elevations.

C. Surveyor shall periodically verify layouts by survey instrumentation and similar appropriate means.

D. Surveyor shall provide record locations of improvements to include the following:

1. Piping
   a. Pipe Size and Material
      1) Provide nominal pipe size or measured pipe outside circumference.
      2) Provide pipe material, using the following material abbreviations:
         a) Ductile iron ..... DI
         b) Stainless Steel ..... SS
         c) Steel ..... STL
         d) Copper ..... CP
         e) Polyvinyl Chloride ..... PVC
         f) Chlorinated Polyvinyl Chloride ..... CPVC
         g) High Density Polyethylene ..... HDPE
         h) Fiberglass ..... FRP

i) Concrete ..... CONC

b. Closed Piping System Fittings

1) All Fittings: Provide coordinates and top of pipe elevations of connecting inlet pipe, outlet pipe, and branch pipe within 12 inches of fitting to pipe joints.

2) Caps: Provide end of cap coordinates in addition to connecting pipe coordinates and elevations.

c. Pipe Deflections and Arcs

1) Rigid Pipe Deflections

a) Provide coordinates and top of pipe elevations for each rigid pipe section with deflected end joints.

b) Provide coordinates and top of pipe elevation with 12 inches of each deflected end joints.

2) Flexible Pipe Arcs: Provide coordinates and top of pipe elevations for the following:

a) Both ends of each flexible pipe arc; and

b) Sufficient (not less than 3) points between ends of each flexible pipe arc to fully define pipe arc.

d. Buried Valves

1) All Valves

a) Provide coordinates and top of pipe elevations of connecting inlet pipe and outlet pipe within 12 inches of valve to pipe joints.

b) Provide center coordinates of valves along centerlines of connecting pipe.

2) Gear Operated Valves: Provide coordinates for gear actuator operating nut in addition to valve connecting pipe coordinates and elevations.

e. Valve Vaults

1) Provide corner coordinates of rectangular and square valve vaults.

2) Provide center coordinates and diameter of circular valve vaults.

3) Provide valve vault top elevation and bottom elevation.

f. Manholes, Wet Wells, and Inlets

1) Manhole, Wet Well, and Inlet Structures

a) Provide corner coordinates of rectangular and square manholes, wet wells, and inlets.

b) Provide center coordinates and diameter of circular manholes, wet wells, and inlets.

c) Provide top elevation and bottom elevation of manholes, wet wells, and inlets.

2) Inlet and Outlet Piping

a) Provide coordinates of connecting pipe within 12 inches of manhole, wet well, or inlet exterior wall.

b) Provide invert elevations of connecting pipe.

g. Crossings and Conflicts

1) Top Pipe: Provide coordinates and top of pipe elevation at center of crossing.

2) Bottom Pipe: Provide coordinates and top of pipe elevation on both sides of upper pipe and within 6 inches of exterior wall of upper pipe.

2. Site Improvements

a. Provide sufficient coordinates and elevations to define edge of pavement and pavement slope.

b. Provide coordinates and elevations to define edge of sidewalks and paths and slope of sidewalks and paths.

c. Provide coordinates and elevations of curbs and gutters.

d. Provide coordinates and elevations required to define dimensions and arrangement of traffic guard railing, sidewalk railing, traffic and information signs, traffic signals, lighting poles, power poles, pole anchors, and other site improvements.

e. Provide sufficient coordinates and elevations to define location, dimensions, and shape of headwalls and other drainage structures.

f. Provide sufficient coordinates and elevations to define location, dimensions, and shape of retaining walls, boundary walls, and other walls.

g. Provide corner coordinates and elevations of fences and gates.

h. Provide sufficient finish grade elevations to define centerline, toe of slope, and top of slope of ditches and swales.

i. Provide sufficient finish grade elevations to define top of slope, bottom of slope, and other changes in finish grade slope.

j. Provide sufficient finish grade elevations to define finish grade contours based on 1-foot contours.

4. Other Work: Provided horizontal and vertical record data pertinent to completed Work.

E. Surveyor shall establish coordinates and elevations for parts of structures, piping, ductbanks, conduits, and other improvements, to be buried, <u>before</u> improvements are covered. Placing stakes or other markers on pipe or other improvements to be surveyed after backfilling is complete will <u>not</u> be acceptable. Work required to expose and backfill improvements, to provide coordinates and elevations as specified in this Section, shall be performed by the Contractor at no additional cost to the Owner.

END OF SECTION 01 71 23

THIS PAGE INSERTED FOR CORRECT PAGINATION

SECTION 01 71 23.19

PROTECTION OF MONUMENTS AND BENCHMARKS

PART 1 – GENERAL

1.01 SUMMARY

A. Section Includes: Requirements for protection of monuments, benchmarks, and other reference points.

1.02 QUALITY CONTROL

A. Land Surveyor: Registered in the State of Florida and acceptable to Engineer.

PART 2 – PRODUCTS (not used)

PART 3 – EXECUTION

3.03 MONUMENTS, BENCHMARK, AND OTHER REFERENCE POINTS

A. Protection and Replacement of Monuments, Benchmarks, and Other Reference Points

1. Protect survey control points prior to starting site work or any other work that might destroy, damage, or otherwise disturb survey control points. Preserve said reference points during construction. Do not damage, disturb, or move permanent monuments, benchmarks, or other reference points. Do not damage, disturb, or move temporary monuments, benchmarks, or other reference points established by the Engineer for Project, unless otherwise approved by the Engineer.
2. Retain a Registered Land Surveyor who shall establish references that will not be disturbed, for the following:
   a. Any permanent benchmarks, monuments, or other reference points that might be disturbed during construction; and
   b. Any temporary monuments, benchmarks, or other reference points established by the Engineer for Project, that might be disturbed during construction.
3. Promptly report to Engineer destruction, damage, or disturbance of the following:
   a. Any permanent monument, benchmark, or other reference point; or
   b. Any temporary monument, benchmark, or other reference point established by the Engineer for Project.
4. Replace destroyed, damaged, or otherwise disturbed monument, benchmark, or reference point at no additional cost to the Owner. Registered Land Surveyor shall replace monuments, benchmarks, and other reference points destroyed, damaged, or otherwise disturbed.

B. Relocation of Monuments, Benchmarks, and Other Reference Points

1. Report to Engineer any requirement to relocate the following:
   a. Any permanent monument, benchmark, or other reference point; or
   b. Any temporary monument, benchmark, or other reference point established by the Engineer for Project.
2. Make no changes without prior written notice to, and approval of, Engineer.
3. Following approval by Engineer, Registered Land Surveyor shall relocate monuments, benchmark, and other reference points.

END OF SECTION 01 71 23.19

SECTION 01 73 29

CUTTING AND PATCHING

PART 1 – GENERAL

1.01 SUMMARY

A. Section Includes: Requirements and procedures for cutting and patching.

1.02 SYSTEM DESCRIPTION

A. Perform cutting and patching required to complete work shown and specified.

B. Perform cutting and patching as shown on the Drawings and specified in this Section.

1.03 SUBMITTALS

A. General: As specified in:

1. Section 01 33 00 Submittal Procedures;
2. Section 01 33 23 Shop Drawings, Product Data, and Samples; and
3. This Section.

B. Submit the following:

1. Written request for authorization to perform cutting or alteration.
   a. Submit written request in advance of cutting, restoration, or alteration which affects:
      1) Structural integrity of any element of Project.
      2) Integrity of weather-exposed or moisture-resistant element.
      3) Efficiency, maintenance, or safety of any operational element.
      4) Visual qualities of sight-exposed elements.
      5) Work of Owner or separate contractor.
   b. Include in request:
      1) Identification of Project.
      2) Location and description of affected work.
      3) Necessity for cutting, restoration, or alteration.
      4) Description of proposed work, and products to be used.
      5) Alternatives to cutting, restoration, or alteration.
      6) Effect on work of Owner or separate contractor.
      7) Written permission of affected separate contractor.
      8) Date and time work will be executed.
2. Shop drawings for fabricated items to be used in alterations and restoration.

3. Product data for items and materials to be used in alterations and restoration.
4. Request for substitution as specified in Section 01630 Product Substitution Procedures.

1.04 EXISTING UTILITIES AND IMPROVEMENTS

A. General

1. Protect existing utilities and improvements as specified in the General Conditions.
2. Protect existing utilities and improvements which are not shown to be removed or relocated.
3. Ascertain the actual location of existing utilities and improvements that will be encountered.
4. Supervise and observe excavation operations.

B. Public Utilities and Franchise Utilities

1. General: Do not interrupt service of any public utility or franchise utility without notification and approval of applicable public utility or franchise utility.
2. Work in Public Right-of-Way and Utility Easements
   a. Notify the applicable public utilities, franchise utilities, or public utilities and franchise utilities prior to performing work in public right-of-way or utility easement where property of public utilities or franchise utilities may be encountered.
   b. Do not perform excavations until underground utilities have been located by public utilities, franchise utilities, or public utilities and franchise utilities having property in the area to be excavated.
3. Work on Owner's Property
   a. Notify the Engineer prior to performing excavations in areas where existing public utilities, franchise utilities, or public utilities and franchise utilities may by encountered.
   b. Do not perform excavations until underground utilities have been located by public utilities, franchise utilities, or public utilities and franchise utilities having property in the area to be excavated.
4. Relocation of Public Utility or Franchise Utility Property
   a. If is necessary to relocate the property of any public utility or franchise utility, the public utility or franchise utility property will be relocated by the applicable public utility or franchise utility unless otherwise shown or specified.
   b. If public utility or franchise utility property is shown or specified to be relocated by the Contractor, relocate public utility or franchise utility property in accordance with the written instructions or recommendations of the applicable public utility or franchise utility.
   c. Notify Engineer and applicable public utility or franchise utility a sufficient time in advance of relocation for the following:
      1) Measures to be taken which prevent, or minimize, interruption of service.

2) Scheduling of personnel to perform, observe, or perform and observe relocation.

d. Provide access to applicable public utility, franchise utility, or public utility and franchise utility personnel, vehicles, and equipment required to perform, observe, or perform and observe relocation of public utility, franchise utility, or public utility and franchise utility property.

5. Repair of Public Utility or Franchise Utility Property

a. If service of public utility or franchise utility is interrupted or property of public utility or franchise utility is damaged without notification and approval of applicable public utility or franchise utility, immediately notify Engineer, Owner, and affected utility.

b. Service interruption, property damage, or service interruption and property damage shall be corrected, repaired, or corrected and repaired by affected public utility or franchise utility, unless otherwise approved by Engineer and affected utility.

c. Repairs by Contractor shall be done in accordance with instructions of the affected utility.

d. Repairs and fines related to unscheduled interruptions, damage, or unscheduled interruption and damage shall be paid by the Contractor with no additional cost to the Owner.

C. Owner's Utilities, Process Piping, and Improvements

1. General

a. Do not interrupt service of Owner's existing utilities, process piping, or other improvements without notification and approval of Engineer.

2. Repair of Owner's Utilities, Process Piping, and Improvements

a. If Owner's utilities, process piping, or other improvements are interrupted or damaged without notification and approval, immediately notify Engineer and Owner.

b. Unscheduled service interruption, property damage, or service interruption and property damage shall be corrected, repaired, or corrected and repaired as follows:

1) Contractor shall take immediate actions to shut off flows, shut off pumps, shut off equipment, and contain spills as applicable to the event.

2) Engineer shall direct Contractor to make repairs, assist Owner in making repairs, or provide access to event site for Owner to make repairs.

c. Repair work by Contractor shall meet the requirements of the Owner.

d. Repairs and fines related to unscheduled interruptions, damage, or unscheduled interruption and damage shall be paid by the Contractor with no additional cost to the Owner.

D. Unrecorded Underground Utilities or Improvements

1. Plans show features of topography and underground utilities, but do not purport to show in complete detail all such lines or obstructions.
2. Existing utilities shown on Drawings are based upon available records. Data regarding existing utilities is presented for Contractor's convenience only, and shall not be used as a basis for claims of extra compensation.
3. Examine available records and make exploratory excavations whenever necessary to determine locations of existing pipes, valves, or other underground improvements.
4. Take prudent precautions not to damage unrecorded underground utilities and improvements.
5. If unrecorded underground utilities or other improvements are encountered, immediately notify the Engineer and inform the Engineer of the conditions encountered. Include written report of conditions encountered with Progress Schedule covering period in which unrecorded underground utilities or improvement was encountered.
6. If unrecorded underground utilities or improvements conflict with Work, changes shall be made under the terms of the Contract Documents. Changes to the Work shall be as approved by the Engineer. Payment for changes related to conflicts created by unrecorded underground utilities or improvements will be made as follows:
   a. Payment will be made under an allowance, if the Agreement includes an allowance for interferences.
   b. Payment will be made by a Change Order or Written Amendment as specified in the General Conditions, if the Agreement does not include an allowance for interferences.

PART 2 – PRODUCTS

2.01 PRODUCTS FOR CUTTING AND PATCHING

A. Type and Quality of Existing Products: Determine by inspecting and testing existing products where necessary, referring to existing work as a standard.

B. Products for Restoration: Products identical to, or equal to, products used in existing work when new.

C. Products for Alterations: As specified in individual specification Sections applicable to products.

PART 3 – EXECUTION

3.01 INSPECTION

A. Inspect existing conditions, including elements subject to damage or movement during alteration, restoration, or alteration and restoration.

B. Remove debris and abandoned items from areas of alteration and renovation work and from concealed spaces.

C. Verify that demolition is complete.

D. Verify that areas are ready for installation of new work.

E. Beginning of restoration work or alteration work means acceptance of existing conditions.

3.02 PREPARATION

A. Provide supports to assure structural integrity of surroundings.

B. Close openings in exterior surfaces so that existing work [and salvage items] are protected from weather and extremes of temperature and humidity. Insulate ductwork and piping to prevent condensation in exposed areas.

C. Maintain excavations free of water.

D. Provide barriers, covers, and other protection required to prevent structural elements, equipment, piping, conduit, paving, finishes, and other adjacent improvements from being damaged.

E. Cut, move, or remove items as necessary for access to alterations and renovation work. Replace and restore at completion.

F. Remove unsuitable material not marked for salvage, such as rotted wood, corroded metals, and deteriorated masonry and concrete.

G. Remove and cut work so that damage is minimized. Remove and cut work to provide a means of restoring products and finishes as follows:

1. If products, finishes, or products and finishes are specified, restore work to specified condition.

2. If products, finishes, or products and finishes are not specified, restore work to original condition.

H. Remove surface finishes and prepare surfaces to provide for proper installation of new work and finishes.

3.03 CUTTING PIPE AND CONDUIT

A. Where new piping is to be connected to existing piping, cut existing piping square. Properly prepare ends of pipe for connection indicated on the drawings. Repair damage to lining and coating of existing piping resulting from cutting.

B. Where existing piping, or conduit, is to be removed or abandoned in place, cut existing piping, or conduit, square or disconnect piping, or conduit, at an existing joint. Seal exposed ends of abandoned connections with plugs, caps, or blind flanges suited for material, type, and service of pipe, or conduit.

END OF SECTION 01 73 29

SECTION 01 74 00

CONSTRUCTION CLEANING

PART 1 – GENERAL

1.01 SUMMARY

A. Section Includes:

1. Requirements for cleaning project area.
2. Requirements for disposal of waste materials, debris, and rubbish during construction.

1.02 PROJECT SITE AND FACILITIES CLEANING

A. The Contractor shall be fully responsible for cleaning each work area within the project site, from the start of work in the area, until improvements in the area have been completed and accepted by the Owner.

B. The Contractor shall be fully responsible for cleaning each material and equipment storage area, from initial use of the area for material, equipment, or material and equipment storage, until all material and equipment have been removed from the area and restoration of the area has been completed and accepted by the Owner.

C. The Contractor shall be fully responsible for cleaning each construction staging area, from initial use of the area for construction staging, until all of the Contractor's, trailers, equipment, and vehicles have been removed from the area and restoration of the area has been completed and accepted by the Owner.

D. The Contractor shall be fully responsible for cleaning all Contractor's trailers, equipment, vehicles, tools, and other Contractor owned items, from initial placement until final removal from the project site.

1.03 CLEANING OF NEW WORK

A. The Contractor shall be fully responsible for cleaning related to new Work including, but not necessarily limited to, the following:

1. Cleaning of cured, or partially cured, concrete surfaces prior to placement of additional concrete.
2. Cleaning of joint surfaces prior to making joints.
3. Cleaning of surfaces prior to application of finish.
4. Cleaning of equipment and enclosures prior to substantial completion.
5. Cleaning of piping prior to substantial completion.

B. Cleaning relative to new Work shall be as specified in individual Specifications Sections.

PART 2 – PRODUCTS

2.01 EQUIPMENT

A. Provide covered containers for deposit of waste materials, debris, and rubbish.

PART 3 – EXECUTION

3.01 CLEANING

A. Maintain areas under Contractor's control free of waste materials, debris, and rubbish. Maintain site in a clean and orderly condition.

B. Remove debris and rubbish from pipe chases.

C. Periodically clean interior areas to provide suitable conditions for work.

D. Broom clean interior areas prior to start of surface finishing, and continue cleaning on an as-needed basis.

E. Control cleaning operations so that dust and other particulates will not adhere to wet or newly-coated surfaces.

F. Project site cleaning shall meet the requirements of Section 01 57 00 Temporary Controls.

3.02 DISPOSAL

A. Remove waste materials, debris, and rubbish from project area daily.

B. Remove temporary materials, equipment, services, and construction prior to Substantial Completion inspection.

C. Remove temporary waste disposal containers prior to project completion.

3.03 REPAIR AND RESTORATION

A. Clean and repair damage caused by installation or use of temporary facilities.

B. Restore existing facilities used during construction to condition prior to construction.

END OF SECTION 01 74 00

SECTION 01 77 00

CONTRACT CLOSEOUT

PART 1 – GENERAL

1.01 SUMMARY

A. Section Includes: Requirements for contract closeout.

1.02 CLOSEOUT PROCEDURES

A. Comply with procedures stated in General Provisions, Special Provisions, and conditions of the Contract for construction for Final Completion procedures.

B. Complete all Work, including all items on the tentative list of items to be completed, issued with the Certificate of Substantial Completion.

C. When Contractor considers work has reached final completion, submit written certification that Contract Documents have been reviewed, work has been inspected, and that Work is complete in accordance with Contract Documents and ready for Engineer's inspection.

D. In addition to submittals required by the conditions of the Contract, provide submittals required by governing authorities, and submit a final statement of accounting giving total adjusted Contract Sum, previous payments, and sum remaining due.

E. Engineer will issue a final Change Order reflecting approved adjustments to Contract Sum not previously made by Change Order.

1.03 FINAL CLEANING

A. Complete final cleaning prior to final inspection.

B. Clean site, sweep paved areas, rake clean other surfaces.

C. Remove waste and surplus materials, rubbish, and construction facilities from the Project and from the site prior to submitting Application for Final Payment.

1.04 PROJECT RECORD DOCUMENTS

A. Store documents separate from those used for construction.

B. Keep documents current; do not permanently conceal any work until required information has been recorded.

C. At Contract closeout, submit documents with transmittal letter containing date, Project title, Contractor's name and address, list of documents, and signature of Contractor.

D. Do not submit Application for Final Payment prior to receiving Engineer’s acceptance of project record documents.

1.05 WARRANTIES AND BONDS

A. Provide duplicate, notarized copies. Execute Contractor's submittals and assemble Warranties and Bonds executed by subcontractors, suppliers, and manufacturers. Provide table of contents and assemble in binder with durable plastic cover.

B. Submit Warranties and Bonds prior to submitting Application for Final Payment. For equipment put into use with Owner's permission during construction, submit appropriate Warranty, Bond, or both, within 30 days after first operation. For items of Work delayed materially beyond Date of Substantial Completion, provide appropriate updated Warranty, Bond, or both, within ten days after acceptance, listing date of acceptance as start of warranty period.

1.06 SPARE PARTS AND MAINTENANCE MATERIALS

A. Provide products, spare parts, and maintenance materials in quantities specified in each Section, in addition to that used for construction of Work.

B. Deliver products, spare parts, and maintenance materials to Owner and obtain receipt prior to submitting Application for Final Payment.

PART 2 – PRODUCTS (not used)

PART 3 – EXECUTION (not used)

END OF SECTION 01 77 00

SECTION 31 14 13

SOIL STRIPPING AND STOCKPILING

PART 1 – GENERAL

1.01 SUMMARY

A. Section Includes

1. Requirements for soil stripping.
2. Requirements for soil stockpiling

1.02 DEFINITIONS

A. Clearing: Cutting, removal, and proper disposal of trees, stumps, brush, shrubs, rubbish, and other material as required to construct improvements shown and specified.

B. Grubbing: Removal and disposal of stumps larger than 1-1/2-inch in diameter and other similar items to a depth of not less than 12 inches below finish grade.

C. Stripping: Removal and disposal of turf, soil, and roots to a depth of not less than 12 inches below existing grade.

1.03 SUBMITTALS

A. General: As specified in:

1. Section 01 33 00 Submittal Procedures;
2. Section 01 33 23 Shop Drawings, Product Data, and Samples; and
3. This Section.

B. Disposal Sites for Removed Material: Submit list of landfills and/or other locations used for disposal of material removed from Project.

C. Hazardous Materials

1. If hazardous material is encountered, make submittals as required by Laws, Regulations, or Laws and Regulations appropriate to hazardous material encountered.
2. Submit chain of custody documentation.

1.04 PROJECT/SITE CONDITIONS

A. General

1. Execute soil stripping and stockpiling so that there is no injury to persons or damage to adjacent buildings, structures, equipment, materials, piping, wiring, pavement, fences, guardrails, and other adjacent improvements.
2. Execute soil stripping and stockpiling so that trees and other plants to remain are not damaged.

B. Dust Control

1. Control dust resulting from soil stripping and stockpiling so that dust does not spread to occupied portions of buildings and to facilities in service. Control dust resulting from soil stripping and stockpiling so that no nuisance is created in areas surrounding the project site.

2. Protect mechanical and electrical equipment in service from dust resulting from soil stripping and stockpiling.

C. Hazardous Material

1. If hazardous material is observed, immediately stop work in connection with observed hazard, or take emergency measures, make notifications and take actions as specified in the General Conditions and this Section.

2. Should special measures be required for handling of hazardous material, the cost and time of performance for providing such special measures will be addressed by an appropriate Change Order, by separate contact, or by separate subcontract with the Owner as provided in the General Conditions.

PART 2 – PRODUCTS (not used)

PART 3 – EXECUTION

3.01 STRIPPING

A. Strip areas to be excavated under this Project. Strip areas to be filled under this Project.

B. Remove grass, roots, other vegetation, and organics to a depth of 12 inches, minimum. Completely remove roots with a diameter greater that one inch or small roots in high density.

3.02 STOCKPILING

A. Stripped Grass, Roots, and Other Vegetation

1. Remove stripped grass, roots, and other vegetation from the Project site.

2. Stripped grass, roots, and other vegetation may be temporarily stockpiled on the Project site to facilitate removal from the Project site. Temporary stockpiling of stripped grass, roots, and other vegetation on the Project site shall not exceed five working days.

3. Do not mix temporary stockpiled stripped grass, roots, and other vegetation with clean soil. Stockpile stripped grass, roots, and other vegetation in separate area from stockpiled clean soil.

B. Stripped Clean Soil

1. Clean soil shall be free of grass, roots, and other vegetation.

2. Stripped clean soil to be used for backfill and site fill shall be stockpiled in designated area, or area, on the Project site unless otherwise accepted by the

Engineer. If removal and replacement of stripped clean soil is accepted by the Engineer, Contractor shall remove and replace stripped clean soil at no additional cost to the Owner.

3. Stockpile clean soil in an area, or areas that prevents contamination of clean soil with construction debris, grass, roots, and other vegetation. Stockpiled clean soil that becomes contaminated with construction debris, grass, roots, or other vegetation shall be removed from the Project and replaced at no additional cost to the Owner.

3.03 PROTECTION OF ADJACENT AREA

A. Protect areas shown on the Drawings or designated by the Engineer to remain protected from damage by construction operations by erecting suitable barriers or other acceptable means.

B. Areas outside limits of construction as shown on the Drawings shall be protected and no equipment or materials shall be stored on these areas or allowed to damage these areas.

3.04. HAZARDOUS MATERIAL

A. If hazardous material is observed, take actions specified in this Section.

B. Following approval to proceed with removal of hazardous material, remove hazardous material in accordance with procedures approved by the Engineer. Immediately establish chain of custody for any hazardous material removed. Maintain chain of custody.

C. Segregate hazardous material from non-hazardous material.

3.05 DISPOSAL

A. General

1. Dispose of stripped soil contaminated with construction debris, grass, roots, or other vegetation. Dispose of said material off of Project site.

2. Do not burn any material on the site or other areas where burning is not permitted.

B. Stripped Soil, and Other Non-Hazardous Debris

1. Dispose of stripped soil, and other non-hazardous debris as follows:

a. Material may be disposed of in landfill approved and permitted by Florida Department of Environmental Protection.

b. Material may be disposed of on privately owned property with written approval of property owner.

2. Do not dispose of stripped soil, and other non-hazardous debris on:

a. Public rights-of-way;

b. Easements;

c. Waterways;

d. Property zoned Conservation Area;

e. Property zoned Community Services; or

f. Privately owned property without written approval of property owner.

C. Hazardous Material

1. Dispose of hazardous waste in facilities specifically approved and permitted by Florida Department of Environmental Protection and/or US Environmental Protection Agency for disposal of the particular hazardous waste.
2. Maintain chain of custody for hazardous waste and submit chain of custody documentation to Owner.

END OF SECTION 31 14 13

SECTION 31 22 00

GRADING

PART 1 – GENERAL

1.01 SUMMARY

A. Section Includes: Grading

B. Related Sections

1. Section 31 23 26 Earthwork Materials
2. Section 31 23 43 Pipe Haunching, and Trench Backfill

1.02 DEFINITIONS

A. Unsuitable Material: Unsuitable material includes:

1. Topsoil from ground surface to a depth of 12 inches;
2. Class IV soils and Class V soils as defined in this Section;
3. Peat and other highly organic soils;
4. Broken Portland cement concrete and asphaltic concrete;
5. Construction debris;
6. Household debris;
7. Trees, brush, grass, weeds, and other organic debris;
8. Material that cannot meet specified compaction requirements; and
9. Other material that is detrimental to improvements, as determined by Engineer, Geotechnical Consultant, or Engineer and Geotechnical Consultant.

1.03 PROJECT/SITE CONDITIONS

A. Environmental Requirements

1. Do not perform grading during rainfall or high winds.
2. Monitor climatic conditions and anticipate conditions producing rainfall. Do not start grading when storms, torrential rains, or high winds are forecast to occur within the next 2 hours.

B. Unanticipated Conditions

1. Notify Engineer of unexpected subsurface conditions and discontinue work in affected area until notified by Engineer to resume work.
2. Take emergency measures as required to protect persons and improvements.

PART 2 – PRODUCTS (not used)

PART 3 – EXECUTION

3.01 PREPARATION FOR GRADING

A. Locate existing underground structures and utilities in areas of work prior to starting excavation.

B. Identify required lines, levels, contours, and datum.

C. Remove construction debris and other unsuitable material from areas to be graded prior to grading

3.02 GRADING FOR PAVEMENT AND SIDEWALKS

A. Grade subgrade beneath pavement and sidewalks to elevations, lines, slopes, depths and cross-sections required to construct finish surfaces of pavement and sidewalks to elevations, lines, slopes, depths and cross-sections shown on the Drawings; or

B. Where no change in finish surface is shown on the Drawings, grade subgrade beneath pavement and sidewalks to elevations, lines, slopes, depths and cross-sections required to construct finish surfaces of pavement and sidewalks to elevations, lines, slopes, depths and cross-sections that existing prior to start of construction.

3.03 GRADING FOR AREAS TO BE SEEDED, SODDED, OR LANDSCAPED

A. Grade areas to elevations, lines, slopes, depths and cross-sections shown on the Drawings. Grade those areas where no change in finish grade is indicated to elevations, lines, slopes, depths and cross-sections that existed prior to start of construction.

B. Fine grade areas to be seeded, sodded, or landscaped after:

1. Structures and bases are completed;
2. Yard piping trenches are backfilled and rough graded;
3. Excavations for structures are backfilled and rough graded;
4. Site excavation and fill are completed;
5. Site rough grading is completed; and
6. Paving and sidewalks are completed.

C. Shape and slope completed surface to drain away from structures. Completed surface shall be within 0.1 foot of finish elevations, contours, or elevations and contours shown on the Drawings.

3.04 DISPOSAL

A. Unsuitable Material

1. Remove unsuitable material from the Project.
2. Dispose of unsuitable material off of the Project.

B. Excess Material

1. Do not remove excess material designated to remain the property of the Owner. Remove excess material, not designated to remain the property of the Owner, from the Project.
2. Dispose of excess material, removed from the Project, off of the Project as follows:
   a. Material may be disposed of in landfill approved and permitted by Florida Department of Environmental Protection.
   b. Material may be disposed of on privately owned property with written approval of property owner.
3. Do not dispose of excess material on:
   a. Public rights-of-way;
   b. Easements;
   c. Waterways;
   d. Property zoned Conservation Area;
   e. Property zoned Community Services; or
   f. Privately owned property without written approval of property owner.

END OF SECTION 31 22 00

THIS PAGE INSERTED SO THAT FIRST PAGE OF THE FOLLOWING SECTION STARTS ON THE FRONT FACE OF A PAGE PRINTED ON BOTH SIDES

SECTION 31 23 13.83

SUBGRADE PREPARATION AND BEDDING FOR PLASTIC PIPING AND DUCTWORK

PART 1 – GENERAL

1.01 SUMMARY

A. Section Includes: Requirements for subgrade preparation and bedding for plastic piping and ductwork.

B. Related Sections

1. Section 31 23 16.13 Trenching
2. Section 31 23 16.26 Rock Removal
3. Section 31 23 19 Dewatering
4. Section 31 23 23 Earthwork Testing
5. Section 31 23 26 Earthwork Materials

C. Unit Prices

1. Over-excavation

a. If suitable excavated material is available for fill for over-excavation, suitable excavated material shall be placed and compacted at no additional cost to the Owner.

b. If over-excavation is required by the Engineer to replace ledge rock, hard pan, boulders, or soil containing material that is not suitable for trench bottom, imported fill for over-excavation will be paid for per ton of material placed.

c. No additional payment will be made for imported material if over-excavation below trench bottom is not required by the Engineer.

1.02 REFERENCES

A. General: References to standards, specifications, manuals, or codes of any technical society, organization or association, or to the Laws or Regulations of any government authority, whether such reference be specific or by implication, shall mean the latest standard, specification, manual, code, or Laws or Regulations in effect at the time of opening of Bids (or, on the Effective Date of the Agreement if there were no Bids), except as may be otherwise specifically stated in the Contract Documents.

B. State of Florida

1. Florida Trench Safety Act (90-96, Laws of Florida)

C. Occupational Safety and Health Administration

1. Excavation Safety Standards, 29 C.F.R.s.1926.650 Subpart P.

1.03 QUALITY ASSURANCE

A. Placement and compaction of bedding in trenches shall be performed by company with not less than five years of documented experience in underground utility construction.

1.04 PROJECT/SITE CONDITIONS

A. Regulatory Requirements: Provide barricades, warning signs, and lights as required by law, regulation, or law and regulation.

B. Environmental Requirements

1. Do not install piping products or pipe bedding during storms, torrential rains, or high winds.

2. Monitor climatic conditions and anticipate conditions producing rainfall. Do not start trench work when storms, torrential rains, or high winds are forecast to occur within the next 2 hours. Stop installation of piping products and secure trench before storms, torrential rains, or high winds occur.

PART 2 – PRODUCTS

2.01 EARTHWORK MATERIALS FOR PIPE BEDDING

A. As specified in Section 31 23 26 Earthwork Materials

PART 3 – EXECUTION

3.01 INSPECTION

A. Verify site conditions and note irregularities affecting work of this Section.

B. Beginning work of this Section means acceptance of existing conditions.

3.02 PREPARATION FOR OVER-EXCAVATION REPLACEMENT AND PIPE BEDDING

A. Complete trench excavation required to install piping to lines and grades shown on Drawings. Complete trench excavation required to install piping as specified. Complete excavation required to remove unsuitable material from trench.

B. Perform excavation under Section 31 23 16.13 Trenching.

3.03 TRENCH STABILIZATION

A. Keep trench stable until backfilling is complete.

B. Retain and maintain trench stabilization system until backfilling is completed to within three feet of finish grade. Trench stabilization shall meet the requirements of Section 31 23 16.13 Trenching. Install, maintain, and remove trench stabilization under Section 31 23 16.13 Trenching.

3.04 OVER-EXCAVATION REPLACEMENT

A. Replace ledge rock, hard pan, boulders, unsuitable soils, and soil containing material that is not suitable for trench bottom.

B. Replace over-excavation for piping that does not require bedding below bottom of pipe as follows:

1. Provide replacement material as follows:

a. If trench is six inches (6”) or less below the bottom of the pipe, fill and compact over-excavation with bedding material, appropriate to pipe, as specified in this Section.

b. If trench is over-excavated more than six inches (6”) below the bottom of the pipe, but less than twelve inches (12”) below the bottom of the pipe, fill and compact over-excavation with acceptable Class I, II or III soil as defined Section 31 23 26 Earthwork Materials.

c. If trench is over-excavated more than twelve inches (12”) below bottom of pipe, fill and compact over-excavation with crushed stone bedding specified in Section 31 23 26 Earthwork Materials.

2. Place and compact over-excavation replacement material to form a stable surface for the placement of bedding material.

C. For piping that requires bedding below bottom of pipe, replace over-excavation with Class I soil as defined in Section 31 23 26 Earthwork Materials. Place and compact Class I soil to form a stable surface for the placement of bedding material.

3.05 BEDDING

A. General: Properly bed pipelines, conduits and appurtenances as shown on Drawings and as specified in this Section.

B. Pipe Bedding for Plastic Piping and Ductwork

1. Place and compact crushed stone bedding from a minimum of 1/4 diameter of pipe below invert of pipe to bottom of pipe.

2. Place and compact crushed stone bedding from a minimum of 1/4 diameter of duct below invert of duct to bottom of duct.

C. Preparation of Trench Bottom

1. Excavate trench bottom and place bedding material, so that bedding grade is correct following compaction of bedding.

2. Uniformly compact bedding. Use hand or mechanical tamping to compact bedding material.

3. Compact bedding material as required to:

a. Form a stable support for piping products; and

b. Achieve backfill compaction requirements specified in this Section.

4. Bring bedding material to grade prior to installation of pipe, fittings, and valves. Bring bedding material to grade along entire length of pipe.

3.06 COMPACTION FOR PIPE BEDDING

A. General

1. Compact over-excavation replacement for pipe bedding as specified in this Section.
2. Compact pipe bedding as specified in this Section.

B. Compaction Equipment

1. Compaction shall be accomplished by use of appropriate compaction equipment.
2. Compact each lift by repeated passes of appropriate compaction equipment.
3. Select and operate compaction equipment so that pipe, structures, and other improvements are not damaged by compaction operation.

C. Moisture Control

1. Control moisture content of soil during compaction as required to achieve specified compaction.
2. Moisture content of over-excavation replacement bedding material shall be within plus or minus two percent (2%) of optimum moisture content during compaction of material.
3. If necessary, add water or allow material to dry until the proper moisture content for the specified compaction is obtained.

D. Compaction Testing

1. Perform earthwork materials testing as specified in Section 31 23 23 Earthwork Testing.
2. Test compaction of over-excavation replacement if required by the Engineer to verify over-excavation material, as placed and compacted, will provide a stable surface for the placement of bedding material.
3. Test compaction of pipe bedding if required by the Engineer to verify bedding, as placed and compacted, will provide the following:
   a. A stable support for piping products; and
   b. Foundation required to achieve backfill compaction specified in this Section.

END OF SECTION 31 23 13.83

SECTION 31 23 16

EXCAVATION

PART 1 – GENERAL

1.01 SUMMARY

A. Section Includes: Requirements for excavation.

B. Related Sections

1. Section 31 23 16.13 Trenching
2. Section 31 23 16.26 Rock Removal
3. Section 31 26 19 Dewatering

1.02 REFERENCES

A. General: References to standards, specifications, manuals, or codes of any technical society, organization or association, or to the Laws or Regulations of any government authority, whether such reference be specific or by implication, shall mean the latest standard, specification, manual, code, or Laws or Regulations in effect at the time of opening of Bids (or, on the Effective Date of the Agreement if there were no Bids), except as may be otherwise specifically stated in the Contract Documents.

B. Florida Department of Transportation (FDOT) Standards

1. Standard Specifications for Road and Bridge Construction

C. State of Florida

1. Florida Trench Safety Act (90-96, Laws of Florida)

D. Occupational Safety and Health Administration

1. Excavation Safety Standards, 29 C.F.R.s.1926.650 Subpart P.

1.03 DEFINITIONS

A. Rock: A natural aggregate of mineral particles connected by strong and permanent cohesive forces. Rock includes:

1. Limestone, lime rock, sandstone, dolomite, granite marble, lava, and coral.
2. Boulders 1/3 cubic yard or more in volume.
3. Material which by actual demonstration cannot, in the Engineer's opinion, be reasonably excavated with a backhoe or 3/4 cubic yard capacity power shovel equipped with two rippers, or similarly approved equipment and which is, in fact, systematically drilled and blasted or broken by power operated hand tools. Engineer may waive demonstration requirement if material encountered is well-defined rock.

B. Unsuitable Material: Unsuitable material includes:

1. Topsoil from ground surface to a depth of 12 inches;
2. Class IV soils and Class V soils as defined in this Section;

3. Peat and other highly organic soils;
4. Broken Portland cement concrete and asphaltic concrete;
5. Construction debris;
6. Household debris;
7. Trees, brush, grass, weeds, and other organic debris;
8. Material that cannot meet specified compaction requirements; and
9. Other material that is detrimental to improvements, as determined by Engineer, Geotechnical Consultant, or Engineer and Geotechnical Consultant.

1.04 SUBMITTALS

A. General: As specified in:
   1. Section 01 33 00 Submittal Procedures;
   2. Section 01 33 23 Shop Drawings, Product Data, and Samples; and
   3. This Section.

B. Sheeting System
   1. Submit drawings of the sheeting system and design computations for sheeting system, signed and sealed by a Professional Engineer as specified in this Section.
   2. Review of sheeting system submittal by the Engineer shall in no way relieve the Contractor of the responsibility to provide a safe and satisfactory sheeting and shoring system.

C. Disposal Sites for Excavated Material: Submit list of landfills and/or other locations used for disposal of excavated material removed from Project.

D. Hazardous Materials
   1. If hazardous material is encountered, make submittals as required by Laws, Regulations, or Laws and Regulations appropriate to hazardous material encountered.
   2. Submit chain of custody documentation.

1.05 QUALITY ASSURANCE

A. Site excavation shall be performed by company with not less than five years of documented experience in earthwork.

B. Excavation for structures shall be performed by company with not less than five years of documented experience in earthwork for structures.

1.06 PROJECT/SITE CONDITIONS

A. Regulatory Requirements
   1. Conform to Federal and State regulatory requirements for excavations.
   2. Obtain excavation permit prior to starting excavation. Conform to requirements of excavation permit.

3. Provide barricades, warning signs, and lights as required by law, regulation, or law and regulation.

B. Geotechnical Data

1. Geotechnical data prepared for this project are available for review by the Contractor.
2. Data and recommendations in the subsurface investigation report have been used by the Engineer in the preparation of the Drawings and Specifications.
3. Geotechnical Data made available to the Contractor by the Owner, the Engineer, or the Geotechnical Consultant are not guaranteed as to accuracy or completeness. If Geotechnical Data made available to the Contractor by the Owner, the Engineer, or the Geotechnical Consultant are used by the Contractor, the Contractor shall assume all risks resulting from actual conditions differing from conditions set out in the Geotechnical Data.

C. Unanticipated Conditions

1. Notify Engineer of unexpected subsurface conditions and discontinue work in affected area until notified by Engineer to resume work.
2. Take emergency measures as required to protect persons and improvements.

D. Hazardous Material

1. If hazardous material is observed, immediately stop work in connection with observed hazard, or take emergency measures, make notifications and take actions as specified in the General Conditions and this Section.
2. Should special measures be required for handling of hazardous material, the cost and time of performance for providing such special measures will be addressed by an appropriate Change Order, by separate contact, or by separate subcontract with the Owner as provided in the General Conditions.

E. Environmental Requirements

1. Do not perform excavation during storms, torrential rains, or high winds.
2. Monitor climatic conditions and anticipate conditions producing rainfall. Do not start excavation work when storms, torrential rains, or high winds are forecast to occur within the next 2 hours. Stop excavation work and secure excavation before storms, torrential rains, or high winds occur.

PART 2 – PRODUCTS (not used)

PART 3 – EXECUTION

3.01 PREPARATION FOR EXCAVATION

A. Install dewatering system, or systems, and dewater areas to be excavated, as specified in Section 31 23 19 Dewatering, prior to performing excavation.

B. Locate existing underground structures and utilities in areas of work prior to starting excavation.

C. Identify required lines, levels, contours, and datum.

3.02 EXCAVATION, GENERAL

A. Excavation performed under this Section shall be open cut.

B. Dewater excavations as specified in Section 31 23 19 Dewatering.

C. Grade top perimeter of excavation to prevent surface water run off into excavation.

D. Keep perimeter of excavation clear of products, tools, excavated material, and debris to prevent cave-in and to prevent products, tools, excavated material, or debris from falling into excavation.

E. Slope excavation walls, stabilize excavation walls, or slope and stabilize walls of excavations deeper that three feet as required to protect safety of workmen, the general public, existing improvements, other existing features, Work, and excavation walls.

1. Slope shall be as required to provide walls that are stable until backfilling is complete. Slope shall not be less than 1.5 horizontal to 1.0 vertical. Reduce slope angle relative to horizontal if required to provide stable excavation walls.

2. Stabilize excavations, with sheeting, freezing, treme wall, or other methods accepted by the Engineer, wherever required to protect the safety of workmen, the general public, existing improvements, other existing features, and Work. Stabilize excavations and trenches as specified in this Section.

F. Rock shall be removed under Section 31 23 16.26 Rock Removal

3.03 EXCAVATION STABILIZATION

A. General: Materials encountered in excavations, which tend to slough or flow into the excavation, undermine the bank, weaken the overlying strata, or are otherwise rendered unstable by the excavation operation shall be retained by sheeting, stabilization, grouting or other acceptable methods.

B. Sheeting

1. Properly sheet and brace excavations, for conditions encountered and in accordance with requirements of OHSA, as required to protect the safety of workmen, the general public, Work, existing improvements, and other existing features.

2. Sheeting and shoring shall be the responsibility of the Contractor. Sheeting and shoring shall be designed by a Professional Engineer registered in the State of Florida who has a minimum of five years experience in the design of sheeting and shoring systems. Drawings, specifications, and calculations for sheeting and shoring shall be signed, dated, and sealed by a Professional Engineer registered in the State of Florida.

3. For sheeting systems in which sheeting is not incorporated into structure and left in place, excavation shall be sufficient to provide not less that 2 feet clearance between outer surface of finished structure and face of excavation, sheeting, or bracing.

4. Sheeting may be removed provided its removal will not jeopardize existing or new structures, pipes, or other improvements.

5. Do not remove sheeting used as exterior form, or otherwise incorporated into structure. Do not remove sheeting if its removal will jeopardize existing or new structures, piping systems, or other improvements. Any damage to structure, piping system, or other improvement caused by removal of sheeting shall be cause for rejection of the affected portion of the Work.
    a. If sheeting in excavation for structure is left in place, cut-off sheeting 2 feet below finish grade, unless otherwise shown on the Drawings.
    b. If sheeting is required to be left in place, provide sheeting left in place and cut-off sheeting at no additional cost to the Owner.

C. Alternative Excavation Stabilization Methods
    1. Alternative excavation stabilization methods shall properly support excavation and shall meet OSHA requirements.
    2. Alternative excavation stabilization methods shall be designed by the Contractor, and the proposed design shall be sealed by a Professional Engineer registered in the State of Florida.
    3. Do not used alternative excavation stabilization methods that are not reviewed and accepted by the Engineer.

3.04 EXCAVATION FOR DITCHES, SWALES, AND SITE GRADING

A. Perform excavation required to:
    1. Construct swales, ditches, and other waterways to lines and grades shown on the Drawings;
    2. Construct drives and parking area to finish grades shown on the Drawings;
    3. Construct site to finish grades shown on the Drawings; and
    4. Restore site to existing grades where no change in finish grade is indicated.

B. Slope sides and ends of excavation to lines and grades shown on the Drawings.

3.05 EXCAVATION FOR STRUCTURES

A. Perform excavation required to:
    1. Construct buildings, structures, and tanks to elevations shown on the Drawings; and
    2. Remove unsuitable material as required to construct subgrade beneath buildings, structures, tanks, and slabs as specified in this Section.

B. Provide sufficient clearance between excavation wall and structure to install and remove formwork.
    1. Clearance between toe of sloped excavation wall and structure base slab or footings shall not be less than two feet.
    2. Minimum clearance between stabilized excavation wall and structure shall be as specified in this Section.

C. Complete excavation to structure base slab, or footing, subgrade elevation.

3.06 OVER-EXCAVATION

A. Over-Excavation, General

1. Perform over-excavation to remove unsuitable material as shown on the Drawings, as specified, or as shown and specified.
2. If unsuitable material is encountered and is not shown to be removed, notify Engineer of conditions encountered. Do not proceed with over-excavation without approval of the Engineer.
    a. Do not leave excavation or trench in an unstable condition.
    b. If unsuitable material creates unstable excavation or trench, take appropriated measures as required to stabilize excavation or trench.

B. Over-Excavation for Embankments and Fill

1. Remove and replace unsuitable material from subgrade beneath embankments and fill for roadways, storage ponds, and water management retention areas as required to meet specified subgrade requirements.
2. Perform over-excavation to remove unsuitable material beneath subgrade for roadways, storage ponds, and water management retention areas as specified in Section 31 23 26 Earthwork Materials.
3. Replace unsuitable material beneath subgrade for roadways, storage ponds, and water management retention areas under Section 31 23 26 Earthwork Materials.

C. Over-Excavation for Ditches and Swales

1. Remove and replace unsuitable material from beneath bottom of ditch as required to provide a firm, stable and uniform ditch bottom and sides. Remove and replace unsuitable material from beneath bottom of swale as required to provide a firm, stable and uniform swale bottom and sides
2. Perform over-excavation to remove unsuitable material beneath subgrade for ditches and swales as specified in Section 31 23 26 Earthwork Materials.

D. Over-Excavation for Site Grading

1. Remove and replace unsuitable material from excavation for site grading as required to provide a firm, stable and uniform finish grade.
2. Perform over-excavation to remove unsuitable material from excavation for site grading as specified in Section 31 23 26 Earthwork Materials.

E. Over-Excavation for Fill for Structures

1. Remove and replace unsuitable material from subgrade beneath structures as required to meet specified subgrade requirements.
2. Perform over-excavation to remove unsuitable material beneath subgrade structures as specified in Section 31 23 26 Earthwork Materials.
3. Replace unsuitable material beneath subgrade for structures under Section 31 23 26 Earthwork Materials

3.08 EXCAVATED MATERIAL

A. Suitable Material

1. Retain materials removed from excavations that meet the specified requirements for fill or backfill unless otherwise specified or noted.
2. Stockpile excavated materials, to be used for fill or backfill, in areas as directed by Engineer.

B. Unsuitable Material

1. Remove unsuitable material and excess excavated suitable material from the Project.
2. Dispose of unsuitable material and excess excavated suitable material off of the Project.

C. Hazardous Material

1. If hazardous material is observed, take actions specified in this Section.
2. Following approval to proceed with removal of hazardous material, remove hazardous material in accordance with procedures approved by the Engineer. Immediately establish chain of custody for any hazardous material removed. Maintain chain of custody.
3. Segregate hazardous material from non-hazardous material.

3.09 DISPOSAL

A. Unsuitable Material and Excess Excavated Material

1. Unsuitable material shall be disposed of by the Contractor. Suitable excess excavated material shall become the property of the Contractor unless otherwise noted or specified.
2. Suitable excess excavated material designated to remain property of Owner shall be loaded and hauled to site designated by the Owner. Material shall be unloaded at location designated by the Owner.
3. Dispose of excess excavated suitable material not designated to remain the property of the Owner and unsuitable material as follows:
   a. Material may be disposed of in landfill approved and permitted by Florida Department of Environmental Protection.
   b. Material may be disposed of on privately owned property with written approval of property owner.
4. Do not dispose of unsuitable material and excess excavated material on:
   a. Public rights-of-way;
   b. Easements;
   c. Waterways;
   d. Property zoned Conservation Area;
   e. Property zoned Community Services; or
   f. Privately owned property without written approval of property owner.

B. Hazardous Material

1. Dispose of hazardous waste in facilities specifically approved and permitted by Florida Department of Environmental Protection and/or US Environmental Protection Agency for disposal of the particular hazardous waste.
2. Maintain chain of custody for hazardous waste and submit chain of custody documentation to Owner.

END OF SECTION 31 23 16

SECTION 31 23 16.13

TRENCHING

PART 1 – GENERAL

1.01 SUMMARY

A. Section Includes: Requirements for trenching.

B. Related Sections

1. Section 31 23 16 Excavation
2. Section 31 23 16.26 Rock Removal
3. Section 31 26 19 Dewatering

1.02 REFERENCES

A. General: References to standards, specifications, manuals, or codes of any technical society, organization or association, or to the Laws or Regulations of any government authority, whether such reference be specific or by implication, shall mean the latest standard, specification, manual, code, or Laws or Regulations in effect at the time of opening of Bids (or, on the Effective Date of the Agreement if there were no Bids), except as may be otherwise specifically stated in the Contract Documents.

B. Florida Department of Transportation (FDOT) Standards

1. Standard Specifications for Road and Bridge Construction

C. State of Florida

1. Florida Trench Safety Act (90-96, Laws of Florida)

D. Occupational Safety and Health Administration

1. Excavation Safety Standards, 29 C.F.R.s.1926.650 Subpart P.

1.03 DEFINITIONS

A. Rock: A natural aggregate of mineral particles connected by strong and permanent cohesive forces. Rock includes:

1. Limestone, lime rock, sandstone, dolomite, granite marble, lava, and coral.
2. Boulders 1/3 cubic yard or more in volume.
3. Material which by actual demonstration cannot, in the Engineer's opinion, be reasonably excavated with a backhoe or 3/4 cubic yard capacity power shovel equipped with two rippers, or similarly approved equipment and which is, in fact, systematically drilled and blasted or broken by power operated hand tools. Engineer may waive demonstration requirement if material encountered is well-defined rock.

B. Unsuitable Material: Unsuitable material includes:

1. Topsoil from ground surface to a depth of 12 inches;
2. Class IV soils and Class V soils as defined in this Section;

3. Peat and other highly organic soils;
4. Broken Portland cement concrete and asphaltic concrete;
5. Construction debris;
6. Household debris;
7. Trees, brush, grass, weeds, and other organic debris;
8. Material that cannot meet specified compaction requirements; and
9. Other material that is detrimental to improvements, as determined by Engineer, Geotechnical Consultant, or Engineer and Geotechnical Consultant.
10. Asbestos cement pipe.

1.04 SUBMITTALS

A. General: As specified in:
   1. Section 01 33 00 Submittal Procedures;
   2. Section 01 33 23 Shop Drawings, Product Data, and Samples; and
   3. This Section.

B. Sheeting System
   1. Submit drawings of the sheeting system and design computations for sheeting system, signed and sealed by a Professional Engineer as specified in this Section.
   2. Review of sheeting system submittal by the Engineer shall in no way relieve the Contractor of the responsibility to provide a safe and satisfactory sheeting and shoring system.

C. Disposal Sites for Excavated Material: Submit list of landfills and/or other locations used for disposal of excavated material removed from Project.

D. Hazardous Materials
   1. If hazardous material is encountered, make submittals as required by Laws, Regulations, or Laws and Regulations appropriate to hazardous material encountered.
   2. Submit chain of custody documentation.

1.05 QUALITY ASSURANCE

A. Trench excavation shall be performed by company with not less than five years of documented experience in underground utility construction.

1.06 PROJECT/SITE CONDITIONS

A. Regulatory Requirements
   1. Conform to Federal and State regulatory requirements for excavations.
   2. Obtain excavation permit prior to starting excavation. Conform to requirements of excavation permit.
   3. Provide barricades, warning signs, and lights as required by law, regulation, or law and regulation.

B. Geotechnical Data

1. Geotechnical data prepared for this project which includes two borings on each side of the bridge are available for review by the Contractor.
2. Data and recommendations in the subsurface investigation report have been used by the Engineer in the preparation of the Drawings and Specifications.
3. Geotechnical Data made available to the Contractor by the Owner, the Engineer, or the Geotechnical Consultant are not guaranteed as to accuracy or completeness. If Geotechnical Data made available to the Contractor by the Owner, the Engineer, or the Geotechnical Consultant are used by the Contractor, the Contractor shall assume all risks resulting from actual conditions differing from conditions set out in the Geotechnical Data.

C. Unanticipated Conditions

1. Notify Engineer of unexpected subsurface conditions and discontinue work in affected area until notified by Engineer to resume work.
2. Take emergency measures as required to protect persons and improvements.

D. Hazardous Material

1. If hazardous material is observed, immediately stop work in connection with observed hazard, or take emergency measures, make notifications and take actions as specified in the General Conditions and this Section.
2. Should special measures be required for handling of hazardous material, the cost and time of performance for providing such special measures will be addressed by an appropriate Change Order, by separate contact, or by separate subcontract with the Owner as provided in the General Conditions.

E. Environmental Requirements

1. Do not perform trenching during storms, torrential rains, or high winds.
2. Monitor climatic conditions and anticipate conditions producing rainfall. Do not start trenching when storms, torrential rains, or high winds are forecast to occur within the next 2 hours. Stop trenching and secure trench, or trenches, before storms, torrential rains, or high winds occur.

PART 2 – PRODUCTS (not used)

PART 3 – EXECUTION

3.01 PREPARATION FOR TRENCHING

A. Install dewatering system, or systems, and dewater areas to be excavated, as specified in Section 31 23 19 Dewatering, prior to performing trenching.

B. Locate existing underground structures and utilities in areas of work prior to starting trenching.

C. Identify required lines, levels, contours, and datum.

D. Prior to trenching, cut or score pavement to straight edges, six inches outside each edge of the proposed trench. Do not damage pavement not removed.

3.02 TRENCHING, GENERAL

A. Trenching performed under this Section shall be open cut.

B. Dewater trenches as specified in Section 31 23 19 Dewatering.

C. Grade top perimeter of trench to prevent surface water run off into trench.

D. Keep perimeter of trench clear of products, tools, excavated material, and debris to prevent cave-in and to prevent products, tools, excavated material, or debris from falling into trench.

E. Slope trench walls, stabilize trench walls, or slope and stabilize walls of trenches deeper that three feet as required to protect safety of workmen, the general public, existing improvements, other existing features, Work, and trench walls.

1. Slope shall be as required to provide walls that are stable until backfilling is complete. Slope shall not be less than 1.5 horizontal to 1.0 vertical. Reduce slope angle relative to horizontal if required to provide stable trench walls.

2. Stabilize excavations, with sheeting, freezing, treme wall, or other methods accepted by the Engineer, wherever required to protect the safety of workmen, the general public, existing improvements, other existing features, and Work. Stabilize trenches as specified in this Section.

F. Rock shall be removed under Section 31 23 16.26 Rock Removal

3.03 TRENCH STABILIZATION

A. General: Materials encountered in trenches, which tend to slough or flow into the trench, undermine the bank, weaken the overlying strata, or are otherwise rendered unstable by the trenching operation shall be retained by sheeting, stabilization, grouting or other acceptable methods.

B. Sheeting

1. Properly sheet and brace trenches, for conditions encountered and in accordance with requirements of OHSA, as required to protect the safety of workmen, the general public, Work, existing improvements, and other existing features.

2. Sheeting and shoring shall be the responsibility of the Contractor. Sheeting and shoring shall be designed by a Professional Engineer registered in the State of Florida who has a minimum of five years experience in the design of sheeting and shoring systems. Drawings, specifications, and calculations for sheeting and shoring shall be signed, dated, and sealed by a Professional Engineer registered in the State of Florida.

3. Sheeting may be removed provided its removal will not jeopardize existing or new structures, pipes, or other improvements.

5. Do not remove sheeting if its removal will jeopardize existing or new structures, piping systems, or other improvements. Any damage to structure, piping system, or other improvement caused by removal of sheeting shall be cause for rejection of the affected portion of the Work.

a. If sheeting in trench for piping is left in place, cut sheeting off two feet above top of pipe and leave sheeting in place below cut.

b. If sheeting is required to be left in place, provide sheeting left in place and cut-off sheeting at no additional cost to the Owner.

C. Alternative Trench Stabilization Methods

1. Alternative trench stabilization methods shall properly support trench and shall meet OSHA requirements.

2. Alternative, trench stabilization methods shall be designed by the Contractor, and the proposed design shall be sealed by a Professional Engineer registered in the State of Florida.

3. Do not used alternative trench stabilization methods that are not reviewed and accepted by the Engineer.

3.04 TRENCH EXCAVATION

A. Perform trenching required to construct underground piping systems to lines and grades shown on the Drawings.

B. Excavate trench so that piping can be installed to alignment and depth shown on the Drawings and as specified.

C. Trench width shall be ample to permit piping to be laid and jointed properly. Minimum trench width shall be as follows:

1. 16-inch and Smaller Pipe: Eight inches greater than the largest outside diameter of the pipe or bell, or at least three feet, six inches, whichever is greater.

2. 18-inch and Larger Pipe: Twelve inches greater than the largest outside diameter of the pipe or bell.

D. Open no more than 100 feet of trench ahead of pipe laying operations at one time unless a greater length of trench is approved by the Engineer.

E. Excavate trench to elevation required for pipe material.

1. For piping that does not require bedding below bottom of pipe, excavate trench to bottom of pipe.

2. For piping that requires bedding below bottom of pipe, excavate trench to bottom of bedding below pipe.

F. Soil surface at trench bottom shall provide a firm, stable and uniform support for pipe. Soil surface at trench bottom shall be free of any protrusions which may cause point loading on any portion of pipe or bell.

3.05 OVER-EXCAVATION

A. Over-Excavation, General

1. Perform over-excavation to remove unsuitable material as shown on the Drawings, as specified, or as shown and specified.

2. If unsuitable material is encountered and is not shown to be removed, notify Engineer of conditions encountered. Do not proceed with over-excavation without approval of the Engineer.

a. Do not leave trench in an unstable condition.

b. If unsuitable material creates unstable trench, take appropriated measures as required to stabilize trench.

B. Trench Over-Excavation

1. Remove and replace unsuitable material from beneath trench bottom as required to provide a firm, stable and uniform support for pipe.

2. Do not bed pipe on solid rock, boulders, hardpan, unsuitable soils, organic material, or other materials that are not suitable for trench bottom.

a. Remove soils and other materials that are not suitable materials for trench bottom.

b. Remove the following materials from trench bottom:

1) Soils defined as follows in Section 31 23 26 Earthwork Materials:

a) Type CH and Type MH Class IV soils.

b) All Class V soils.

2) Wet, yielding, or mucky soils.

3) Organic material including roots, mulch, or other vegetable matter, which in the opinion of the Engineer, will result in unsatisfactory foundation conditions.

4) Soils containing cobbles, boulders or stones larger than one and one-half inches (1-1/2") in diameter.

5) Ledge rock and hardpan. Remove rock and hardpan to provide bedding width 24 inches wider than pipe.

6) Soils containing rubbish, trash, or other foreign materials.

3. Over-excavate trench bottom and remove unsuitable material as follows, unless otherwise shown on the Drawings:

a. For piping that does not require bedding below bottom of pipe, remove soils and other materials that are not suitable materials for trench bottom to six inches under pipe, minimum.

b. For piping that requires bedding below bottom of pipe, remove soils and other materials that are not suitable materials for trench bottom to six inches under bottom of bedding below pipe.

4. Do not over-excavate trench bottom if trench bottom material is stable undisturbed soil of the follow types, as defined in Section 31 23 26 Earthwork Materials:

a. Class II soil including types GW, GP, SW and SP.

b. Class III soil including types GM, GC, SM and SC.

c. Class IV soil including types CL and ML.

5. Replace unsuitable material from trench bottom under Section 31 23 43 Pipe Haunching and Trench Backfill.

3.08 EXCAVATED MATERIAL

A. Suitable Material

1. Retain materials removed from trenches that meet the specified requirements for bedding, haunching, or backfill unless otherwise specified or noted.
2. Stockpile excavated materials, to be used for bedding, haunching, or backfill, in areas as directed by Engineer.

B. Unsuitable Material

1. Remove unsuitable material and excess excavated suitable material from the Project.
2. Dispose of unsuitable material and excess excavated suitable material off of the Project.

C. Hazardous Material

1. If hazardous material is observed, take actions specified in this Section.
2. Following approval to proceed with removal of hazardous material, remove hazardous material in accordance with procedures approved by the Engineer. Immediately establish chain of custody for any hazardous material removed. Maintain chain of custody.
3. Segregate hazardous material from non-hazardous material.

3.09 DISPOSAL

A. Unsuitable Material and Excess Excavated Material

1. Unsuitable material shall be disposed of by the Contractor. Suitable excess excavated material shall become the property of the Contractor unless otherwise noted or specified.
2. Suitable excess excavated material designated to remain property of Owner shall be loaded and hauled to site designated by the Owner. Material shall be unloaded at location designated by the Owner.
3. Dispose of excess excavated suitable material not designated to remain the property of the Owner and unsuitable material as follows:
   a. Material may be disposed of in landfill approved and permitted by Florida Department of Environmental Protection.
   b. Material may be disposed of on privately owned property with written approval of property owner.
4. Do not dispose of unsuitable material and excess excavated material on:
   a. Public rights-of-way;
   b. Easements;
   c. Waterways;
   d. Property zoned Conservation Area;
   e. Property zoned Community Services; or
   f. Privately owned property without written approval of property owner.

B. Hazardous Material

1. Dispose of hazardous waste in facilities specifically approved and permitted by Florida Department of Environmental Protection and/or US Environmental Protection Agency for disposal of the particular hazardous waste.
2. Maintain chain of custody for hazardous waste and submit chain of custody documentation to Owner.

END OF SECTION 31 23 16.13

SECTION 31 23 16.26

ROCK REMOVAL

PART 1 – GENERAL

1.01 SUMMARY

A. Section Includes: Requirements for rock removal and disposal.

B. Cost

2. Lump Sum Contract

a. Payment for additional rock removal will be addressed by the Contractor submitting an appropriate Change Order and requires the Engineer and Owner's approval before commencing work.

1.02 DEFINITIONS

A. Earth: Unconsolidated material in the crust of the Earth derived by weathering and erosion. Earth includes:

1. Materials of both inorganic and organic origin.
2. Boulders less than 1/3 cubic yard in volume.
3. Gravel, sand, silt, and clay.
4. Material which can be excavated with a backhoe, trenching machine, drag line, clam shell, bulldozer, highlift, or similar excavating equipment without the use of explosives, rock rippers, rock hammers, or jack hammers.

B. Rock: A natural aggregate of mineral particles connected by strong and permanent cohesive forces. Rock includes:

1. Limestone, lime rock, sandstone, dolomite, granite marble, lava, and coral.
2. Boulders 1/3 cubic yard or more in volume.
3. Material which by actual demonstration cannot, in the Engineer's opinion, be reasonably excavated with a backhoe or 3/4 cubic yard capacity power shovel equipped with two rippers, or similarly approved equipment and which is, in fact, systematically drilled and blasted or broken by power operated hand tools. Engineer may waive demonstration requirement if material encountered is well-defined rock.

1.03 SUBMITTALS

A. General: As specified in:

1. Section 01 33 00 Submittal Procedures;
2. Section 01 33 23 Shop Drawings, Product Data, and Samples; and
3. This Section.

B. Submit shop drawings and product data prior to shipping products.

C. Submit description of proposed rock removal method and procedures prior to starting rock removal.

1.04 DELIVERY, STORAGE, AND HANDLING

A. General

1. Product Delivery: As specified in Section 01 65 00 Product Delivery Requirements.

2. Product Storage and Handling: As specified in Section 01 66 00 Product Storage and Handling.

B. Rock Removal Products: Deliver, store, and handle rock removal products in accordance with product manufacturer's recommendations.

PART 2 – PRODUCTS

2.01 ROCK REMOVAL PRODUCTS

A. Rock shall be removed by non-explosive methods.

B. Products used to remove rock shall be as selected by the Contractor and accepted by the Engineer.

PART 3 – EXECUTION

3.01 INSPECTION

A. Verify site conditions and note irregularities affecting work of this Section.

B. Beginning work of this Section means acceptance of existing conditions.

3.02 ROCK REMOVAL, GENERAL

A. Remove rock required to complete Work shown on the Drawings.

3.03 ROCK REMOVAL - NON-EXPLOSIVES METHODS

A. Remove rock by non-explosive methods.

B. Rock removal shall not damage existing structures, piping, equipment, or other improvements.

3.04 DISPOSAL OF ROCK REMOVED

A. Remove excavated rock from the Project.

B. Dispose of rock off of the Project as follows:

1. Material may be disposed of in landfill approved and permitted by Florida Department of Environmental Protection.

2. Material may be disposed of on privately owned property with written approval of property owner.

C. Do not dispose of rock on:

1. Public rights-of-way;
2. Easements;
3. Waterways;
4. Property zoned Conservation Area;
5. Property zoned Community Services; or
6. Privately owned property without written approval of property owner.

END OF SECTION 31 23 16.26

THIS PAGE INSERTED SO THAT FIRST PAGE OF THE FOLLOWING SECTION STARTS ON THE FRONT FACE OF A PAGE PRINTED ON BOTH SIDES

SECTION 31 23 19

DEWATERING

PART 1 – GENERAL

1.01 SUMMARY

A. Section Includes: Requirements for dewatering excavations and trenches.

1.02 SUBMITTALS

A. General: As specified in:

1. Section 01 33 00 Submittal Procedures;
2. Section 01 33 23 Shop Drawings, Product Data, and Samples; and
3. This Section.

B. Submit copy of dewatering permit prior to installing dewatering system, or systems.

C. Submit dewatering plan, or plans, prior to installing dewatering system, or systems.

1.03 QUALITY ASSURANCE

A. Regulatory Requirements

1. General: Obtain permits required by regulatory authorities having jurisdiction and required by the Owner for installation, operation, and removal of dewatering systems.
2. Dewatering Permit

a. Obtain Dewatering Permit from South Florida Water Management District prior to dewatering of any areas. Make application and arrangements and pay fees and charges for dewatering and disposal of discharge from dewatering

b. Submit copy of dewatering permit.

c. Comply with requirements of dewatering permit. Meet regulatory requirements relative to dewatering and disposal of discharge water from dewatering.

1.04 PROJECT/SITE CONDITIONS

A. Noise Limitations.

1. Dewatering systems and equipment shall comply with ordinances regulating noise.
2. Provide “residential” mufflers on engines.
3. Provide sound attenuating enclosures over dewatering system equipment if necessary to meet noise limit requirements of ordinances and regulations.
4. Do not shut off dewatering systems to meet noise limitations during non-work hours. Provide sound attenuating measures to meet noise limit requirements.
5. Provide sound attenuating equipment, devices, and measures at no additional cost to the Owner.

6. Modify dewatering system, or systems, as required to comply with ordinances regulating noise.

B. Damage Prevention

1. Dewatering shall not cause settlement of existing or new structures. Repair or replace structures damaged by settlement caused by dewatering. Repair or replace structures at no additional cost to the Owner.
2. Discharge from dewatering systems shall not cause erosion of turf or soil. Replace turf damaged by dewatering discharge. Replace soil displaced by dewatering discharge. Replace turf and soil at no additional cost to the Owner.
3. Discharge from dewatering systems shall not damage landscaping. Replace landscaping damaged by dewatering discharge. Replace landscaping at no additional cost the Owner.
4. Modify dewatering system, or systems, as required to eliminate conditions that cause damage.

C. Access

1. Dewatering systems and dewatering system operations shall not prevent emergency access, prevent operations and maintenance personnel from performing their assigned tasks, or prevent persons living in the vicinity of construction from completing their normal daily pursuits.
2. Provide temporary access over dewatering system piping for vehicular and pedestrian traffic.

D. Water Supply: Dewatering shall not impact private water supply wells or public water supply wells.

E. Lake and Pond Level: Dewatering shall not impact lake levels and pond levels.

PART 2 – PRODUCTS

2.01 DEWATERING SYSTEMS

A. Contractor shall be responsible for the sizing and selection of dewatering systems, dewatering equipment, dewatering system piping, and appurtenances.

PART 3 – EXECUTION

3.01 GROUNDWATER

A. Contractor shall be responsible for evaluating and determining groundwater conditions.

3.02 DEWATERING PLAN

A. Contractor shall prepare and submit dewatering plan for each dewatering system

B. Ground water plan shall include the following:

1. Groundwater data and assumptions relating to groundwater conditions.

2. Description of proposed dewatering system with drawings, diagrams, and system component data as applicable.
3. Proposed measures to insure dewatering system reliability.
4. Description of discharge water disposal methods.
5. Identification and location of private water supply wells, public water supply wells, lakes, and ponds that may be affected by dewatering.
6. Anticipated affect upon private water supply wells, public water supply wells, lakes, and ponds that may be impacted by dewatering. Proposed measures to ameliorate effects of dewatering upon private water supply wells, public water supply wells, lakes, and ponds.
7. Other data pertinent to the dewatering system.

3.03 DEWATERING SYSTEMS

A. Provide dewatering systems, including well points, wells, chemical grouting, watertight sheeting, ground freezing, tremie wall, or any other technology, as may be necessary to accomplish dewatering in a safe and proper manner. Provide labor and services required to operate and maintain dewatering systems.

B. Provide dewatering systems that control groundwater level in conformance with the requirements of this Section. Provide dewatering systems that lower groundwater to level shown, specified, or shown and specified in advance of excavation. Provide dewatering systems that continuously maintain groundwater level at, or below, level shown, specified, or shown and specified until backfilling and compaction have been completed to level shown, specified, or shown and specified.

C. Provide automatic starting devices, standby pumps, and other equipment and controls required to provide continuous dewatering in the event of an outage of dewatering pump or other dewatering system component.

D. Provide headers, suction piping, and discharge piping as required to convey water from well points, dewatering wells, and caissons to dewatering system discharge point designated in permit and accepted dewatering plan.

E. Modify dewatering system during the course of construction as conditions that affect dewatering change.

3.04 DEWATERING OPEN EXCAVATIONS

A. Lower groundwater to level shown, specified, or shown and specified in advance of excavation. Provide monitoring wells or other means to measure groundwater level prior to starting excavation.

B. Dewater excavation from outside the limits of excavation. Dewater excavation from below the bottom of excavation. Do not dewater excavation from sumps within excavation.

C. Dewater excavation for cast-in-place concrete structures to a minimum level of three feet below structural grade. Dewater excavation for prestressed composite tank to a minimum level of three feet below structural grade. Dewater excavation for building, with wall and column footings, to a minimum level of three feet below bottom of lowest footing.

1. Maintain water level a minimum of three feet below structural grade until backfilling is complete.
2. Maintain dewatering system in operation as required to prevent structures from being displaced by hydrostatic pressure until final acceptance of the Work.

D. Dewatering measures shall provide the following:
1. Prevent instability of excavation due to groundwater.
2. Prevent the disturbance of subgrade bearing materials due to groundwater.
3. Keep excavation free from standing water and running water.
4. Prevent tanks, pipes, and other structures from being displaced by hydrostatic pressures.

E. Do not install or operate dewatering systems that allow movement of soil through excavation or excavation subgrade.

F. Do not install or operate dewatering systems that allow movement of soil from beneath existing or previously installed structures or pipes.

3.05 DEWATERING TRENCHES

A. Lower groundwater to level shown, specified, or shown and specified in advance of excavation. Provide monitoring wells or other means to measure groundwater level prior to starting excavation.

B. Dewater trench from outside the limits of trench. Dewater trench from below the excavated trench bottom. Do not dewater trench from sumps within trench.

C. Dewater trench to a minimum level of 24 inches below excavated trench bottom. Maintain water level a minimum of 24 inches below excavated trench bottom until backfill meets the following requirements:
1. Backfilling and compaction have progressed as to a depth that installed piping will not be displaced by hydrostatic pressure.
2. Backfilling and compaction have been completed above natural water table to a level that remaining backfill can be placed and compacted as specified in Section 02317 Pipe Bedding And Haunching, and Trench Backfill.

D. Dewatering measures shall provide the following:
1. Prevent instability of trench due to groundwater.
2. Prevent the disturbance of subgrade bearing materials due to groundwater.
3. Keep trench free from standing water and running water.
4. Prevent tanks, pipes, and other structures from being displaced by hydrostatic pressures.

E. Do not install or operate dewatering systems that allow movement of soil through trench or trench subgrade.

F. Do not install or operate dewatering systems that allow movement of soil from beneath existing or previously installed structures or pipes.

3.06 DEWATERING FOR FILL AND EMBANKMENTS

A. Lower groundwater to level shown, specified, or shown and specified in advance of stripping or preparation of subgrade for fill. Provide monitoring wells or other means to measure groundwater level prior to starting excavation.

B. Dewater subgrade for fill from outside the limits of fill. Dewater subgrade from below subgrade. Do not dewater subgrade from sumps within limits of fill.

C. Dewater subgrade for fill to a minimum level of 24 inches below top of subgrade. Maintain water level a minimum of 24 inches below top of subgrade until fill is completed to a minimum of 24 inches above subgrade for fill or natural water table, whichever is higher.

D. Dewatering measures shall provide the following:

1. Prevent instability of fill due to groundwater.
2. Prevent the disturbance of fill subgrade bearing materials due to groundwater.
3. Keep fill subgrade and fill free from standing water and running water.
4. Prevent fill subgrade and fill material from being displaced by hydrostatic pressures.

E. Do not install or operate dewatering systems that allow movement of soil through fill subgrade or fill.

F. Do not install or operate dewatering systems that allow movement of soil from beneath fill.

3.07 SURFACE WATER CONTROL

A. Do not allow surface runoff to flow into excavations and trenches.

1. Grade top perimeter of excavation to prevent surface water run-off to flow into excavation.
2. Grade sides and ends of trench to prevent surface water run-off to flow into trench.

B. Do not allow storm water to puddle or pond on construction site except in designated storm water retention areas. Grade construction areas so that storm water drains to storm water system.

C. Do not allow storm water to flow off construction site except through permitted discharge structures and through permitted storm water pipes, conduits, and channels.

D. Do not allow storm water to flow into or through stored fill and backfill materials.

3.08 DEWATERING DISCHARGE CONTROL

A. Discharge water from dewatering system to storm drain systems in accordance with dewatering permit and as specified in this Section. Provide silting basins and other discharge treatment systems in accordance with dewatering permit and to meet discharge permit requirements.

B. Do not allow discharge from dewatering system to puddle or pond on construction site except in areas designated and approved to receive discharge from dewatering system.

C. Do not allow to discharge from dewatering system to flow off construction site except through permitted discharge structures and through pipes, conduits, and channels that have been designated and approved for discharge flow from dewatering systems.

D. Do not use sanitary sewers for disposal of water from water control systems. Do not use sanitary sewer system under construction as conduit to remove ground water from trench.

E. Do not use storm sewer under construction as conduit to remove ground water from trench. Do not use new storm water system for dewatering system discharge unless new storm water system has been approved for dewatering system discharge.

F. Do not discharge water containing settleable solids into storm sewers.

G. Do not contaminate or disturb the environment of properties adjacent to the Work.

H. Do not contaminate streams or other surface waters.

I. Provide temporary facilities and controls for dewatering system discharge. Temporary facilities and controls shall be appropriate to the project, including, but not limited to:

   1. Silting basin, or basins, of adequate size.
   2. Filters.
   3. Coagulants.
   4. Screens.

J. Discharge onto pavement shall not damage pavement.

3.09 DEWATERING SYSTEM REMOVAL AND CLEANUP

A. Completely remove dewatering systems installed for construction.

B. Plug and seal dewatering wells after dewatering operations are concluded. Plug and seal dewatering wells in accordance with permit requirements.

C. Remove and dispose of solids, including sand, mud, and other material, discharged from dewatering systems.

END OF SECTION 31 23 19

SECTION 31 23 23

EARTHWORK TESTING

PART 1 – GENERAL

1.01 SUMMARY

A. Section Includes: Requirements for earthwork testing.

B. Related Sections: Section 01 45 29 Testing Laboratory Services

1.02 REFERENCES

A. General: References to standards, specifications, manuals, or codes of any technical society, organization or association, or to the Laws or Regulations of any government authority, whether such reference be specific or by implication, shall mean the latest standard, specification, manual, code, or Laws or Regulations in effect at the time of opening of Bids (or, on the Effective Date of the Agreement if there were no Bids), except as may be otherwise specifically stated in the Contract Documents.

B. ANSI/ASTM Standards

1. ANSI/ASTM D1557 Test Method for Laboratory Compaction Characteristics of Soil
(AASHTO T-180) Using Modified Effort (56,000 ft.-lbf/ft^3)(2,700 kN-m/m^3)

C. ASTM Standards

1. ASTM D1556 Test Method for Density and Unit Weight of Soil in Place by the Sand-Cone Method
2. ASTM D2487 Classification of Soils for Engineering Purposes
3. ASTM D2922 Nuclear Test Methods for Density of Soil and Soil-Aggregate in Place by Method (Shallow Depth)
4. ASTM D2937 Method Test Method for Density of Soil in Place by the Drive-Cylinder

1.03 DEFINITIONS

A. Maximum Density: Maximum weight in pounds per cubic foot of a specific material.

B. Optimum Moisture: Percentage of water in a specific material at maximum density.

1.04 SUBMITTALS

A. General: As specified in:

1. Section 01 33 00 Submittal Procedures;
2. Section 01 33 23 Shop Drawings, Product Data, and Samples; and
3. This Section.

B. Test Reports: Submit test reports as specified in Section 01 45 29 Testing Laboratory Services

PART 2 – PRODUCTS (not used)

PART 3 – EXECUTION

3.01 LABORATORY

A. Retain an independent testing laboratory for earthwork testing as specified in Section 01 45 29 Testing Laboratory Services.

1. Independent testing laboratory shall make Proctor Tests, moisture content tests, and field density tests as specified in this Section.
2. All earthwork for Project shall be monitored on a periodic basis by the independent testing laboratory for general compliance with the intent of earthwork specifications.

B. Contractor shall pay the cost of earthwork testing including:

1. Proctor tests;
2. Moisture content tests;
3. Initial density tests; and
4. Additional density tests required as a result of failure of any initial density test.

3.02 TESTING COORDINATION

A. Contractor shall schedule earthwork to permit a reasonable time for testing before placing succeeding lifts. Contractor shall schedule trenching and backfilling to permit a reasonable time for testing before placing succeeding lifts or installing pipe.

B. Contractor shall keep testing laboratory informed of earthwork progress.

3.03 PROCTOR TESTS

A. Perform one Proctor Test, according to ASTM D1557, for each source of fill used on the Project.

B. If material from excavation is used as backfill material, take a test proctor from the best available location as determined by the testing laboratory.

3.04 MOISTURE CONTENT

A. Moisture Content Test Standard: Determine Optimum moisture content of bedding, haunching, fill, and backfill material by Modified Proctor Method (ASTM D1557).

B. Site Fill and Backfill Moisture Content Tests

1. Stripped Area ..... 1 test per 2,000 square yards, minimum
2. Fill/Backfill for Roadways .....1 test per 750 cubic yards, each source, minimum
3. Fill for Embankments.....1 test per 750 cubic yards, each source, minimum
4. Fill/Backfill for Lawns and Landscaped Areas ..... 1 test for each 1,500 cubic yards, each source, minimum

C. Trench Backfill Moisture Content Tests

1. Backfill under Structures ..... 1 test per each 500 cubic yards, each source, minimum
2. Backfill for Roadways .....1 test per 750 cubic yards, each source, minimum
3. Backfill for Embankments .....1 test per 750 cubic yards, each source, minimum
4. Backfill for Lawns and Landscaped Areas ..... 1 test for each 1,500 cubic yards, each source, minimum

D. Fill, Backfill, and Subgrade Moisture Content Tests for Structures

1. Stripped Area .....1 test per structure, minimum
2. Fill, Backfill, and Subgrade Material ..... 1 test per each 500 cubic yards, each source, minimum

3.05 FIELD DENSITY TESTING

A. Field Density Test Standards: Field density tests shall meet the requirements of ASTM D1556, ASTM D2922, or ASTM D2937.

B. Initial Density Tests

1. Site Fill and Backfill Density Tests

a. Fill/Backfill for Roadways .....1 test per layer for each 600 feet of roadway (minimum 1 test per day)

b. Fill for Embankments..... 1 test per layer for each 1,500 square feet of embankment (minimum 1 test per day)

c. Fill/Backfill for Lawns and Landscaped Areas .....1 test for each 8,000 square feet of fill (minimum 1 test per day)

2. Trench Backfill Density Tests

a. Initial Backfill..... 1 test for each 300 foot length of trench (minimum 1 test per day)

b. Select Final Backfill .....1 test per layer for each 300 foot length of trench (minimum 1 test per day)

c. Suitable Final Backfill ..... 1 test per layer for each 1,000 feet of trench (minimum 1 test per day)

3. Fill, Backfill, and Subgrade Density Tests for Structures

a. Stripped and Proof-Rolled Area ..... 1 Test per 1,500 square feet (minimum 2 tests)

b. Structural Fill ..... 1 Test per 1,500 square feet, each layer (minimum 3 tests)

c. Fill Inside of Structure ..... 1 Test per 750 square feet, each layer (minimum 2 tests)

d. Bottom of Wall Footings ..... 1 Test per 75 linear feet of wall (minimum 3 tests)

e. Column Footings ..... 1 Test every two footings

f. Structure Subgrade ..... 1 Test per 750 square feet, each layer (minimum 2 tests)

C. Additional Density Testing

1. If test density of compacted bedding, haunching, backfill, fill, or subgrade is less than specified density, make additional tests at locations directed by Engineer.

2. Make additional field density tests at no additional cost to the Owner.

END OF SECTION 31 23 23

SECTION 31 23 26

EARTHWORK MATERIALS

PART 1 – GENERAL

1.01 SUMMARY

A. Section Includes: General requirements for earthwork materials including the following:

1. Bedding for piping;
2. Gravel base for concrete structures;
3. Select Fill; and
4. Suitable Fill.

1.02 REFERENCES

A. General: References to standards, specifications, manuals, or codes of any technical society, organization or association, or to the Laws or Regulations of any government authority, whether such reference be specific or by implication, shall mean the latest standard, specification, manual, code, or Laws or Regulations in effect at the time of opening of Bids (or, on the Effective Date of the Agreement if there were no Bids), except as may be otherwise specifically stated in the Contract Documents.

B. Florida Department of Transportation (FDOT) Standards

1. Standard Specifications for Road and Bridge Construction

1.03 DEFINITIONS

A. Soil Classification

1. General: Soil classifications presented in this Article are applicable to natural soils and processed materials.
2. ASTM D2487 Unified Soil Classification System (USCS)

a. Class I: Angular, one-quarter inch (1/4") to one and one-half inch (1-1/2") graded stone, including a number of fill materials that have regional significance such as coral, slag, cinders, crushed shells and crushed stone.

b. Class II: Coarse sands and gravels with maximum particle size of one and one-half inches (1-1/2"), including variously graded sands and gravels containing small percentages of fines, generally granular and non-cohesive, either wet or dry. The following soil types are included in this class:

1) GW (well-graded gravel)
2) GP (pea gravel or crushed stone mixed with sand)
3) SW (well-graded sand)
4) SP (poorly graded sands and gravelly sands with little or no fines)

c. Class III: Fine sand and clayey (clay filled) gravels, including fine sands, sand-clay mixture and gravel-clay mixtures. The following soil types are included in this class:

1) GM (silty gravels)

2) GC (clayey gravels)

3) SM (silty sands)

4) SC (clayey sands)

d. Class IV: Silt, silty clays and clays, including inorganic clays and silts of medium to high plasticity and liquid limits. The following soil types are included in this class:

1) CH (Inorganic clays of high plasticity)

2) CL (Inorganic clays of low to medium plasticity, gravelly clays, sandy clays, silty clays, lean clays)

3) MH (inorganic silts, micaceous or diatomaceous fine sands or silts, elastic silts)

4) ML (Inorganic silts, very fine sands, rock flour, silty or clayey fine sands)

e. Class V: This class includes the following organic soils as well as soils containing frozen earth, debris, rocks larger than one and one-half inches (1-1/2") in diameter and other foreign materials:

1) OL (Organic silts and organic silty clays of low plasticity)

2) OH (Organic clays of medium to high plasticity)

3) PT (Peat, muck, and other highly organic soils)

B. Rock: A natural aggregate of mineral particles connected by strong and permanent cohesive forces. Rock includes:

1. Limestone, lime rock, sandstone, dolomite, granite marble, lava, and coral.

2. Boulders 1/3 cubic yard or more in volume.

3. Material which by actual demonstration cannot, in the Engineer's opinion, be reasonably excavated with a backhoe or 3/4 cubic yard capacity power shovel equipped with two rippers, or similarly approved equipment and which is, in fact, systematically drilled and blasted or broken by power operated hand tools. Engineer may waive demonstration requirement if material encountered is well-defined rock.

C. Unsuitable Material: Unsuitable material includes:

1. Topsoil from ground surface to a depth of 12 inches;

2. Class IV soils and Class V soils as defined in this Section;

3. Peat and other highly organic soils;

4. Broken Portland cement concrete and asphaltic concrete;

5. Construction debris;

6. Household debris;

7. Trees, brush, grass, weeds, and other organic debris;
8. Material that cannot meet specified compaction requirements; and
9. Other material that is detrimental to improvements, as determined by Engineer, Geotechnical Consultant, or Engineer and Geotechnical Consultant.

1.04 SUBMITTALS

A. General: As specified in:

1. Section 01 33 00 Submittal Procedures;
2. Section 01 33 23 Shop Drawings, Product Data, and Samples; and
3. This Section.

B. Fill, Backfill, Haunching, Bedding, and Structure Base Materials

1. Off-Site Fill, Backfill, Haunching, Bedding, and Structure Base Materials
   a. Notify the Engineer of off-site sources of fill, backfill, haunching, bedding, and structure base materials.
   b. Submit a representative sample, approximately 50 pounds, of each off-site material to be furnished.
2. On-Site Excavated Materials: Prior to using on-site excavated material for fill, backfill, haunching, or bedding materials, submit sieve analysis and Proctor test results of the existing excavated soils proposed to be used for fill, backfill, bedding, or haunching.

1.05 DELIVERY, STORAGE, AND HANDLING

A. General

1. Product Delivery: As specified in Section 01 65 00 Product Delivery Requirements.
2. Product Storage and Handling: As specified in Section 01 66 00 Product Storage and Handling.

B. Earthwork Materials

1. Comply with requirements of Federal, State, and City authorities regulating shipment of products.
2. Do not allow material intended to be used for fill, backfill, haunching, bedding, or structure base to be mixed with unsuitable material. All material, regardless of its source, that become mixed with unsuitable material shall be classified as unsuitable material and removed from the Project.
3. Do not allow stored material from off-site sources to be mixed with stored on-site excavated suitable material suitable for fill, backfill, haunching, or bedding.
4. Do not allow different type materials to become mixed.
5. Protect stored fill materials so that the composition of materials is not altered and materials are not otherwise degraded or contaminated.

PART 2 – PRODUCTS

2.01 SOURCE FOR BEDDING AND FILL MATERIALS

A. Use excavated materials that meet the requirements specified in this Section.

B. Furnish and install imported material if excavated material does meet the requirements of this Section.

C. Excess excavated material that meets the requirements of this Section shall be stored at the project site until backfilling is completed. Do remove excess excavated material that meets the requirements of this Section from the project site until backfilling is completed.

2.02 BEDDING FOR PIPING

A. Crushed Stone Bedding: Imported, graded stone meeting the requirements of Class I soil with maximum particle size equal to one-half inch (1/2").

1. Size range and resulting high void ratio of crushed stone bedding material makes it suitable for use to dewater trenches during pipe installation.

2. The permeable characteristic of crushed stone dictates that use of crushed stone bedding material be limited to locations where pipe support will not be lost by migration of fine grained natural material from trench walls and bottom or migration of other embedment materials into crushed stone bedding material.

3. When migration of fine grained natural material into crushed stone bedding is possible, minimum size range of crushed stone bedding shall be reduced to finer than one-quarter inch (1/4"), and gradation shall be selected to limit the size of the voids.

4. An alternative to modifying the gradation is to use a geotextile fabric as a barrier to migration to fines.

B. Coarse Sand and Gravel Bedding: Coarse sands and gravels meeting the requirements of Class II soil with maximum particle size equal to three-quarter inch (3/4") and with less than five percent fines.

1. Coarse-grained soils with less than 12 percent but more than five percent fines may be used for coarse sand and gravel bedding if approved by the Engineer.

2. Gradation of coarse sand and gravel bedding material influences density and pipe support strength of coarse sand and gravel when bedding material is loosely placed. Gradation of coarse sand and gravel bedding material may be critical to the pipe support and stability of the foundation and embedment, if the material is imported and is not native to the trench excavation. Gradation other than well graded, such as uniformly graded or gap graded, may permit loss of support by migration into void spaces of a finer grained natural material from the trench wall and bottom.

3. When migration of fine grained natural material into coarse sand and gravel bedding is possible, adjust gradation of bedding material to limit size of voids so there is no migration of fines from trench walls or trench bottom into bedding material.

4. An alternative to modifying the gradation is to use a geotextile fabric as a barrier to migration of fines.

2.03 STRUCTURAL FILL SUBGRADE OVER-EXCAVATION REPLACEMENT MATERIAL

A. Structural fill subgrade over-excavation replacement material shall be crushed stone, size FDOT No. 89 coarse aggregate.

2.04 GRAVEL BASE FOR STRUCTURES

A. Gravel base for cast-in-place concrete structures shall be crushed stone, size FDOT No. 89 coarse aggregate.

B. Gravel base for prestressed composite tanks shall be crushed stone, size FDOT No. 7 or No. 78 coarse aggregate.

C. Gravel base for precast concrete structures shall be crushed stone, size FDOT No. 7 or No. 78 coarse aggregate.

2.05 SELECT FILL

A. Select fill material shall be Class I or Class II soils as defined in this Section.

B. Select fill material shall be non-cohesive and non-plastic, when material is either wet or dry. Select fill material shall be free from vegetation, roots, organic material, muck, or other deleterious matter.

C. Select fill material shall contain not more than 8 percent, by weight, of fines passing the No. 200 sieve.

D. Select fill material shall not contain any rock larger than one-half inch (1/2") in any cross-sectional plane.

2.06 SUITABLE FILL

A. Suitable fill material shall be clean to slightly silty or clayey fine sands, or clean to slightly silty or clayey mixture of sand and limerock.

B. Select fill material shall be non-cohesive and non-plastic, when material is either wet or dry. Select fill material shall be free from vegetation, roots, organic material, muck, or other deleterious matter.

C. Suitable fill material shall contain not more than 8 percent, by weight, of fines passing the No. 200 sieve.

D. Suitable fill material containing limerock shall have sufficient sand to fill voids in limerock. Suitable fill material shall contain not more than 20 percent rock. Maximum rock size shall not exceed the following dimension, in any cross-sectional plane:

1. Maximum Rock Size in Upper 4 inches of Fill: 2 inches.

2. Maximum Rock Size below Upper 4 inches of Fill: 6 inches.

PART 3 – EXECUTION (not used)

END OF SECTION 31 23 26

THIS PAGE INSERTED SO THAT FIRST PAGE OF THE FOLLOWING SECTION STARTS ON THE FRONT FACE OF A PAGE PRINTED ON BOTH SIDES

SECTION 31 23 43

PIPE HAUNCHING AND TRENCH BACKFILL

PART 1 – GENERAL

1.01 SUMMARY

A. Section Includes

1. Requirements for pipe haunching.
2. Requirements for trench backfill.

B. Related Sections

1. Section 31 16 13 Trenching
2. Section 31 23 19 Dewatering
3. Section 31 23 26 Earthwork Materials
4. Section 31 23 23 Earthwork Testing
5. Section 31 23 16 Excavation
6. Section 31 23 16.26 Rock Removal

C. Unit Prices

1. Trenching and Backfilling

a. Trenching and backfilling for Work included in this project is included in the cost per unit of work installed, unless otherwise stated herein, and the unit price for work includes trenching and backfilling in whatever nature of material may be encountered. No additional allowance to the unit price bid by the Contractor for the project or any part thereof will be allowed on any claim for extra compensation because of trenching, backfilling, or trenching and backfilling being of a nature different from that contemplated by Contractor.

b. The Contractor is charged with the responsibility of actually investigating and examining the site of the project before preparing his Bid and satisfying himself in this respect.

1.02 REFERENCES

A. General: References to standards, specifications, manuals, or codes of any technical society, organization or association, or to the Laws or Regulations of any government authority, whether such reference be specific or by implication, shall mean the latest standard, specification, manual, code, or Laws or Regulations in effect at the time of opening of Bids (or, on the Effective Date of the Agreement if there were no Bids), except as may be otherwise specifically stated in the Contract Documents.

B. State of Florida

1. Florida Trench Safety Act (90-96, Laws of Florida)

C. Occupational Safety and Health Administration

1. Excavation Safety Standards, 29 C.F.R.s.1926.650 Subpart P.

1.03 QUALITY ASSURANCE

A. Placement and compaction of bedding, haunching, and backfill in trenches shall be performed by company with not less than five years of documented experience in underground utility construction.

1.04 PROJECT/SITE CONDITIONS

A. Regulatory Requirements: Provide barricades, warning signs, and lights as required by law, regulation, or law and regulation.

B. Environmental Requirements

1. Do not install piping products, pipe bedding, haunching, or trench backfill during storms, torrential rains, or high winds.

2. Monitor climatic conditions and anticipate conditions producing rainfall. Do not start trench work when storms, torrential rains, or high winds are forecast to occur within the next 2 hours. Stop installation of piping products and secure trench before storms, torrential rains, or high winds occur.

PART 2 – PRODUCTS

2.01 EARTHWORK MATERIALS FOR PIPE BEDDING AND HAUNCHING, AND TRENCH BACKFILL

A. As specified in Section 31 23 26 Earthwork Materials

PART 3 – EXECUTION

3.01 INSPECTION

A. Verify site conditions and note irregularities affecting work of this Section.

B. Beginning work of this Section means acceptance of existing conditions.

3.02 TRENCH STABILIZATION

A. Keep trench stable until backfilling is complete.

B. Retain and maintain trench stabilization system until backfilling is completed to within three feet of finish grade. Trench stabilization shall meet the requirements of Section 31 23 16.13 Trenching. Install, maintain, and remove trench stabilization under Section 31 23 16.13 Trenching.

3.03 HAUNCHING

A. Haunching Material

1. Haunching material shall be as specified in Section 31 23 26 Earthwork Materials.

2. Haunching material shall be select fill, unless otherwise specified or noted on the Drawings.

B. Haunching for Pipe

1. Haunching for PVC Pipe: Place crushed stone bedding material from top of bedding to spring line (centerline) of pipe.
2. Haunching for Ductile Iron Pipe
    a. If trench bottom at bottom of pipe is Class I, Class II, Class III or acceptable dry, native Class IV soils as defined in Section 31 23 26 Earthwork Materials, place haunching material from trench bottom to spring line (centerline) of pipe.
    b. If trench bottom is not acceptable for bedding, place crushed stone bedding material or coarse sand and gravel bedding material from top of bedding up to 1/8 diameter of pipe. Place haunching material from top of crushed stone bedding or coarse sand bedding material to spring line (centerline) of pipe.
3. Haunching for Prestressed Concrete Cylinder Pipe
    a. If trench bottom at bottom of pipe is Class I, Class II, Class III or acceptable dry, native Class IV soils as defined in Section 31 23 26 Earthwork Materials, place haunching material from trench bottom to spring line (centerline) of pipe.
    b. If trench bottom is not acceptable for bedding, place crushed stone bedding material or coarse sand and gravel bedding material from top of bedding up to 1/8 diameter of pipe. Place haunching material from top of crushed stone bedding or coarse sand bedding material to spring line (centerline) of pipe.

C. Piping Support: Support piping during placement and compaction of haunching.

D. Placing Haunching Material
1. Do not place haunching over porous, wet, or spongy trench bottom or bedding material.
2. Hand place haunching material.
3. Place haunching evenly along both sides of pipe, fittings, and valves so that equal load is maintained along both sides of pipe, fittings, and valves.
4. Work haunching under pipe, fittings, and valves so that there are no voids in fill and so that pipe, fittings, and valves are properly supported.
5. Place haunching so that piping materials, coatings, and encasement are not damaged.

E. Haunching Material Compaction
1. Compact haunching material as specified in this Section.
2. Compact haunching so that pipe, fittings, and valves are properly supported.
3. Compact haunching as required to achieve density specified for backfill material.
4. Minimum compaction of haunching shall be 95 percent of Modified Proctor Maximum Dry density (ASTM D1557).

3.04 INITIAL BACKFILL

A. Initial Fill, General
1. Initial backfill shall extend from the top of haunching to one foot above top of pipe. Placement of initial backfill may be either by hand or mechanical means.

2. Keep initial backfill free from debris, rocks, clods, and other items larger than one-half inch (1/2").
3. Do not compact initial fill directly over pipe, fittings, or valves until adequate cover has been provided to prevent damage to pipe, fitting, or valve. Adequate cover will depend on piping materials and type of compaction equipment used. Adequate cover shall be as accepted by the Engineer.

B. Initial Fill Material

1. Initial fill material shall be as specified in Section 31 23 26 Earthwork Materials.
2. Initial fill material shall be select fill, unless otherwise specified or noted on the Drawings.

C. Initial Fill Compaction

1. Place and compact initial fill material as specified in this Section.
2. Minimum compaction of initial fill beneath structures shall be 98 percent of Modified Proctor Maximum Dry density (ASTM D1557).
3. Minimum compaction of initial fill beneath paved areas shall be 98 percent of Modified Proctor Maximum Dry density (ASTM D1557).
4. Minimum compaction of initial fill beneath turf, landscaping, and unimproved areas shall be 95 percent of Modified Proctor Maximum Dry density (ASTM D1557).

3.05 FINAL BACKFILL

A. General

1. Backfill trenches to contours and elevations shown on drawings, or to match existing grade if finish grade is not changed.
2. Backfill trench systematically, as early as possible, to allow maximum time for natural settlement.

B. Final Backfill Beneath Structures

1. Final backfill in trenches wholly or partially beneath structures shall be select fill.
2. Place and compact select fill material in continuous layers not exceeding 8 inches in depth. Minimum compaction of select fill shall be 98 percent of Modified Proctor Maximum Dry density (ASTM D1557). Compaction of select fill beneath structures shall be by small portable plate compactor or other approved method.

C. Final Backfill Beneath Paved Areas

1. Final backfill in trenches wholly or partially beneath paved areas as follows shall be select fill:
   a. Public streets, roads, and parking areas.
   b. Utility facility roads, drives, and parking areas.
   c. Institutional roads, drives, and parking areas.
   d. Commercial roads, drives, and parking areas.
2. Place and compact select fill material in continuous layers not exceeding 8 inches in depth. Minimum compaction of select fill shall be 98 percent of Modified Proctor

Maximum Dry density (ASTM D1557). Compaction of select fill beneath paved areas shall be by mechanical means or other approved methods.

D. Final Backfill Beneath Turf, Landscaping, and Unimproved Areas

1. Final backfill in trenches beneath turf, landscaping, and unimproved areas shall be suitable fill unless otherwise shown on the Drawings.
2. Place and compact suitable fill material in continuous layers not exceeding 12 inches in depth. Minimum compaction of suitable fill shall be 95 percent of Modified Proctor Maximum Dry density (ASTM D1557). Compaction of suitable fill shall be by mechanical means or other approved methods.

3.06 COMPACTION FOR PIPE HAUNCHING AND TRENCH BACKFILL

A. General

1. Compact pipe haunching as specified in this Section.
2. Compact trench backfill as specified in this Section.

B. Compaction Equipment

1. Compaction shall be accomplished by use of appropriate compaction equipment.
2. Compact each lift by repeated passes of appropriate compaction equipment.
3. Select and operate compaction equipment so that pipe, structures, and other improvements are not damaged by compaction operation.

C. Moisture Control

1. Control moisture content of soil during compaction as required to achieve specified compaction.
2. Moisture content of over-excavation replacement, bedding, haunching, fill, and backfill material shall be within plus or minus two percent (2%) of optimum moisture content during compaction of material.
3. If necessary, add water or allow material to dry until the proper moisture content for the specified compaction is obtained.

D. Compaction Testing

1. Perform earthwork materials testing as specified in Section 31 23 23 Earthwork Testing.
2. Test compaction of over-excavation replacement if required by the Engineer to verify over-excavation material, as placed and compacted, will provide a stable surface for the placement of bedding material.
3. Test compaction of pipe bedding if required by the Engineer to verify bedding, as placed and compacted, will provide the following:
   a. A stable support for piping products; and
   b. Foundation required to achieve backfill compaction specified in this Section.
4. Test compacted pipe haunching, in place, prior to placement of initial backfill.
5. Test compacted initial backfill, in place, prior to placement of final backfill.
6. Test each compacted final backfill layer, in place, prior to placement of succeeding layers.

END OF SECTION 31 23 43

SECTION 31 25 00

EROSION AND SEDIMENTATION CONTROLS

PART 1 – GENERAL

1.01 SUMMARY

A. Section Includes: Requirements for erosion and sedimentation controls.

1.02 DEFINITIONS

A. The phrase "DOT Specifications" shall refer to the Florida Department of Transportation Standard Specifications for Road and Bridge Construction.

1.03 SUBMITTALS

A. General: As specified in:

1. Section 01 33 00 Submittal Procedures; and
2. This Section

B. Submit copy of Erosion Control Plan prior to installing erosion and sedimentation control measures.

C. Submit erosion and sedimentation control plan approved by State, local, or State and local authorities.

1.04 PROJECT/SITE CONDITIONS

A. Regulatory Requirements

1. Dewatering

a. Obtain permit, or permits, for erosion and sedimentation control for earthwork and dewatering. Make application and arrangements and pay fees and charges for permit, or permits.

b. Obtain permit, or permits, for erosion and sedimentation control prior to starting earthwork. Obtain permit, or permits, for erosion and sedimentation control prior to installing dewatering system, or systems.

c. Comply with requirements of permits for erosion and sedimentation control.

2. Stormwater Pollution Prevention Plan

a. Prepare "Notice of Intent to Use Generic Permit for Stormwater Discharge from Construction Activities that Disturb Five or More Acres of Land". Submit application and pay fee for review and approval of Notice.

b. Obtain response to Notice prior to starting construction.

c. Comply with requirements of Stormwater Pollution Prevention Plan and Generic Permit for Stormwater Discharge from Construction Activities that Disturb Five or More Acres, including modifications, addenda, and additions by Federal, State, and County regulatory authorities having jurisdiction.

PART 2 – PRODUCTS

2.01 MATERIALS FOR EROSION AND SEDIMENT CONTROL

A. Filter Fabric

1. Filter Fabric Material: Nylon, polyester, propylene or ethylene yarn with ultraviolet ray inhibitors and stabilizers conforming to Section 985 of the DOT Specifications.
2. Filter Fabric Flow: 0.3 gallons per foot per minute, minimum.

B. Sediment Fence Posts

1. Post Material: Pine
2. Post Diameter: four inches
3. Post Length: Four feet, minimum.

C. Spillway Section Stone: Class "B" erosion control stone.

D. Stone Installed on Inside Spillway Face for Drainage Control: No. 67 washed stone conforming to Section 901 of the DOT Specifications.

PART 3 – EXECUTION

3.01 EROSION AND SEDIMENTATION CONTROL MEASURES, GENERAL

A. Install erosion and sedimentation control measures required as shown on the Drawings and specified in this Section.

B. Provide labor and services required to maintain erosion and sedimentation control measures.

C. Remove erosion and sedimentation control measures that are not a permanent part of Work.

3.02 EROSION CONTROL PLAN

A. Excavation method shall be selected by the Contractor, unless otherwise shown on the Drawings or required by local regulations

B. Contractor shall be responsible for erosion and sedimentation control.

C. Prepare and submit an Erosion Control Plan based upon the proposed excavation method.

D. Erosion Control Plan shall be reviewed and accepted by the Engineer prior to commencement of any land disrupting activities. Erosion Control Plan shall be reviewed and accepted by State, local, or State and local authorities having jurisdiction over erosion and sedimentation control prior commencement of any land disrupting activities.

E. Submit erosion and sedimentation control plan approved by State, local, or State and local authorities.

3.03 LOCATION

A. The type of sedimentation and erosion control (SEC) devices to be employed on the project will depend on location and adjoining features of the land at that location.

B. Construct SEC devices in accordance with approved Erosion Control Plan.

3.04 TEMPORARY SEDIMENT TRAP CONSTRUCTION

A. Clear, grub and strip area under embankment of vegetation and root mat.

B. Clear retention area to elevation as approved by Engineer.

C. Use fill material free of roots, woody vegetation and organic matter. Place fill in lifts not to exceed nine inches. Machine compact fill.

D. Construct dam and stone spillway to dimensions, slopes and elevations shown on approved permit, or approved permit drawings.

E. Construct spillway crest level (± 0.05 feet) and at least 18 inches below top of dam at all points.

F. Extend stone outlet section to vegetated road ditch on zero grade with top elevation of stone level with bottom of drain.

G. Construct top of dam six inches above natural surrounding ground, minimum.

H. Stabilize embankment and disturbed area above sediment pools as shown in vegetation plan.

3.05 SEDIMENT FENCE CONSTRUCTION

A. Locate sediment fence down-slope from source of sediment. Extend sediment fence around source of sediment so that all run-off from source of sediment flows through sediment fence.

B. Set posts down-slope of fabric.

C. Bury toe of fence approximately eight inches deep.

D. When joints are necessary, securely fasten fabric at support post with overlap to next post.

3.06 SILTATION AND BANK EROSION

A. Take adequate precautions to minimize siltation and bank erosion in crossing canals or ditches, in discharging well point systems, or during other construction activities.

END OF SECTION 31 25 00

THIS PAGE INSERTED SO THAT FIRST PAGE OF THE FOLLOWING SECTION STARTS ON THE FRONT FACE OF A PAGE PRINTED ON BOTH SIDES

SECTION 32 02 13

RESTORATION - GENERAL

PART 1 – GENERAL

1.01 SUMMARY

A. Section Includes

1. Requirements for restoration of ditches, swales, drain pipes, culverts, headwalls, and other drainage facilities.
2. Requirements for restoration of fences, walls, planters, mail boxes, signs, and other items.
3. Requirements for temporary restoration during construction.

B. Related Sections

1. Section 32 02 23 Pavement and Sidewalk Restoration
2. Section 32 02 33 Planting Restoration

PART 2 – PRODUCTS

2.01 REPLACEMENT PRODUCTS

A. Replacement fence, walls, planters, mail boxes, signs, and other items shall be new and unused.

B. Fence, walls, planters, mail boxes, signs, and other items shall be the same type as the items replaced.

C. Fence, walls, planters, mail boxes, signs, and other items shall be of equal quality to items damaged or destroyed when items were new.

PART 3 – EXECUTION

3.01 RESTORATION, GENERAL

A. Restore ditches, swales, and other drainage facilities disturbed, damaged, or destroyed during construction of the Work included in this Contract

B. Repair or replace drain pipes, culverts, headwalls, and other drainage structures damaged or destroyed during construction of the Work included in this Contract

C. Repair or replace fences, walls, planters, mail boxes, signs, and other items damaged or destroyed during construction of the Work included in this Contract.

D. Provide temporary restoration required for access of emergency vehicles.

E. Provide temporary restoration required for access of persons and vehicles.

F. Provide temporary restoration required for access of utility personnel and vehicles.

3.02 PUBLIC SAFETY

A. Conduct construction operations and activities so that access for emergency vehicles is provided at all times.

B. Provide temporary restoration as required to maintain access to homes, commercial establishments, government facilities, schools, and churches for persons and vehicles.

3.03 DRAINAGE SYSTEM RESTORATION

A. Ditches, swales, drains, and storm sewers shall be referenced, by the Contractor, as to grade, location, section, and elevation prior to construction.

B. Drainage systems shall be maintained during construction, and repaired or replaced as necessary after construction.

C. Replace drainage pipes, storm sewers, and culverts that are damaged or destroyed and cannot be repaired to the satisfaction of the Engineer. Replacement pipe and culvert shall be same size and material as pipe and culvert removed, except that replacement pipe and culvert size shall not be less than 12 inches, unless otherwise shown or directed.

D. Replacement drainage culverts shall have mitered ends in conformance to FDOT standard details.

E. When drain pipe and culverts are removed and replaced, install drain pipes and culverts to the same line, grade, and elevations that existed prior to construction.

F. Install replacement drain pipe, storm sewers, culverts, headwalls, and other drainage structures to the same line, grade, and elevations as the removed drain pipe, storm sewers, culverts, headwalls, and other drainage structures, unless otherwise shown on the Drawings.

G. Regrade ditches, swales, and other surface water flow ways to the same line, grade, elevation, and section that existed prior to construction, unless otherwise shown on the Drawings.

3.04 SODDING DITCHES, SWALES, AND OTHER SURFACE WATER FLOW WAYS

A. Furnish and install sod in ditches, swales, and other surface water flow ways disturbed or damaged during construction.

B. Furnish and install sod as specified in Section 02901 Landscape Restoration.

3.05 RESTORATION OF FENCES, WALLS, AND PLANTERS

A. For fences, walls, planters, and other similar improvements that completely replace improvements removed, replacement fences, walls, planters, and other similar improvements shall be of equal quality to improvements removed when improvements were new.

B. For fences, walls, and planters, and other similar improvements repaired or partially replaced, restore fences, walls, planters, and other similar improvements so that the restored fences, walls, planters, and other similar improvements match adjoining improvements that are not damaged.

C. Fences, walls, planters, and other similar improvements shall be restored by firms and persons skilled in the construction of those improvements.

D. Restoration of fences, walls, planters, and other similar improvements by unskilled labor will not be acceptable.

3.06 RESTORATION OF MAIL BOXES AND SIGNS

A. Install mail boxes and signs in the location of the mail boxes and signs prior to construction, unless otherwise shown or directed.

B. Provide foundations for mail boxes and signs equal to the foundations prior to construction.

C. Install mail boxes and signs level and plumb.

D. Install mail boxes to the height required by the postal service.

END OF SECTION 32 02 13

THIS PAGE INSERTED SO THAT FIRST PAGE OF THE FOLLOWING SECTION STARTS ON THE FRONT FACE OF A PAGE PRINTED ON BOTH SIDES

SECTION 32 02 23

PAVEMENT AND SIDEWALK RESTORATION

PART 1 – GENERAL

1.01 SUMMARY

A. Section Includes

1. Requirements for repair and replacement of existing streets, roads, highways, drives, parking areas, and other paved areas.
2. Requirements for repair and replacement of curbs and gutters.
3. Requirements for repair and replacement of sidewalks.

B. Related Sections: Section 32 02 13 Restoration - General

1.02 REFERENCES

A. General: References to standards, specifications, manuals, or codes of any technical society, organization or association, or to the Laws or Regulations of any government authority, whether such reference be specific or by implication, shall mean the latest standard, specification, manual, code, or Laws or Regulations in effect at the time of opening of Bids (or, on the Effective Date of the Agreement if there were no Bids), except as may be otherwise specifically stated in the Contract Documents.

B. ANSI/ASTM Standards

1. ANSI/ASTM D1557 Test Method for Laboratory Compaction Characteristics of Soil
(AASHTO T-180) Using Modified Effort (56,000 ft.-lbf/ft^3)(2,700 kN-m/m^3)

C. FDOT Standards

1. Standard Specifications for Road and Bridge Construction.

1.03 DEFINITIONS

A. The phrase "DOT Specifications" shall refer to the Florida Department of Transportation Standard Specifications for Road and Bridge Construction.

1.04 QUALITY ASSURANCE

A. DOT Specifications referred to in this Section are made a part of this Contract to the extent of such references, and shall be as binding upon the Contract as through reproduced herein in their entirety.

1.05 DELIVERY, STORAGE, AND HANDLING

A. General

1. Product Delivery: As specified in Section 01 65 00 Product Delivery Requirements.
2. Product Storage and Handling: As specified in Section 01 66 00 Product Storage and Handling.

B. Pavement Products

1. Store products so that products are not damaged or deteriorated. Promptly remove damaged or deteriorated products for the job site. Replace damaged, deteriorated, or damaged and deteriorated products with new products that are not damaged or deteriorated.
2. Store products so that products are not dispersed by weather or construction activities. Replace products that are dispersed by weather of construction activities at no additional cost to the Owner.

PART 2 – PRODUCTS

2.01 BASE

A. Limerock Base: Limerock base shall consist of either one or two courses of Miami Oolite limerock in accordance with Sections 200 and 911 of the DOT Specifications.

2.02 MATERIALS FOR ASPHALTIC CONCRETE PAVEMENT

A. Prime Coat: Material used for prime coat shall be cut-back Asphalt Grade RC-70 conforming to Sections 300 and 916 of the DOT Specifications for prime to be used on Miami Oolite formation limerock.

B. Tack Coat: Material used for tack coat shall be Emulsified Asphalt Grade RS-2 conforming to Sections 300 and 916 of the DOT Specifications. All areas to be paved shall receive a final tack coat that provides a uniform finish for new and existing paving.

C. Asphaltic Concrete: Materials and construction of asphaltic concrete patch and surface courses shall be Type S-1 Asphaltic Concrete conforming to Sections 330, 331 and 916 of the DOT Specifications.

2.03 MATERIALS FOR PORTLAND CEMENT CONCRETE PAVEMENT AND SIDEWALKS

A. Portland Cement Concrete: Portland cement concrete shall be Class I, conforming to Section 346 of the DOT Specifications.

B. Reinforcing and Welded Wire Fabric: Joint reinforcing and welded wire fabric shall conform to Section 925 of the DOT Specifications.

C. Embedded Items: Materials for embedded items shall conform to Section 931 of the DOT Specifications.

D. Joints: Materials for forming and sealing joints shall conform to Section 932 of the DOT Specifications.

PART 3 – EXECUTION

3.01 PAVEMENT REPAIR

A. Repair damage to pavement as a result of Work under this Contract. Repair damage to pavement in a manner satisfactory to the Engineer and at no additional cost to the Owner. Pavement repair shall include preparation of the subgrade, placing and

compacting of the limerock base, constructing placing and maintaining of surface treatment, as specified in this Section.

B. Width of repairs shall extend at least 18 inches beyond the limit of damage. Edge of pavement to be left in place shall be cut to a true edge with a saw or other acceptable method that provides a clean edge to abut repair. Line of the repair shall be reasonably uniform with no unnecessary irregularities.

C. Finish elevations, lines, and grades of replacement pavement shall be same as finish elevations, lines, and grades of pavement removed, unless otherwise shown on the Drawings.

3.02 PREPARATION FOR PAVING AND SURFACING

A. Clean areas to be paved or surfaced. Remove temporary pavement materials which are not part of the permanent pavement. Remove deleterious materials and unsuitable materials.

B. Existing pavement, surfaces, or walks which are not cut or broken along straight lines shall be cut along straight lines prior to pavement replacement or walk replacement.

3.03 SUBGRADE PREPARATION

A. Compact subgrade. Compaction shall not be less than 98% of Modified Proctor Maximum Dry density (ASTM D1557).

B. Compact trench backfill.

C. Compact pavement subgrade where pavement extends beyond trench.

D. Compact existing subgrade material if existing subgrade material is suitable material.

E. If existing subgrade material is not suitable material, remove eight inches of existing subgrade and provide eight inches of suitable subgrade material. Compact replacement subgrade material. Remove, replace, and dispose of unsuitable subgrade material at no additional cost the Owner.

3.04 ASPHALTIC CONCRETE PAVEMENT

A. Subgrade

1. Stabilize roadway subgrades to the minimum depth shown on the Drawings to a Limerock Bearing Ratio of not less than 40.

2. Stabilizing shall be Type B as defined in Section 160 of the DOT Specifications. Subgrade stabilizing shall meet the requirements of Section 160 of the DOT Specifications.

3. Provide crushed limerock, course limerock screenings, or any other stabilizing material acceptable to the Engineer if required to achieve a Limerock Bearing Ratio of not less than 40. Addition and mixing of stabilizing material shall meet the requirements of Section 160 of the DOT Specifications. Provide stabilizing material at no additional cost to the Owner.

B. Limerock Base

1. Construct limerock base in accordance with Section 200 of the DOT Specifications.

2. Minimum thickness and width of limerock base shall be as shown on the Drawings.

C. Prime Coat: Apply prime coat in accordance with Section 300 of the DOT Specifications.

D. Tack Coat: Apply tack coat in accordance with Section 300 of the DOT Specifications.

E. Asphaltic Concrete

1. Provide asphaltic concrete wearing surface in accordance with Sections 330 and 331 of the DOT Specifications

2. Minimum thickness of asphaltic concrete wearing surface shall be as shown on the Drawings.

3.05 CRUSHED SHELL PAVEMENT AND CRUSHED AGGREGATE PAVEMENT

A. Construct crushed shell pavement and crushed aggregate pavement as shown on the Drawings.

B. Material for new pavement shall match existing pavement material.

C. Minimum thickness of pavement shall be as shown on the Drawings. Match thickness of existing pavement if thickness of existing pavement exceeds minimum thickness shown on the Drawings.

D. Compact crushed shell pavement and crushed aggregate pavement to a Limerock Bearing Ratio of not less than 70.

3.06 SIDEWALK, CURB, AND GUTTER REPLACEMENT

A. Replace in kind sidewalks, curbs, and gutters with respect to dimensions and material types, unless otherwise shown on the Drawings.

B. Finish elevations, lines, grades of replacement sidewalks, curbs, and gutters shall be the same as elevations, lines, grades of sidewalks, curbs, and gutters removed, unless otherwise shown on the Drawings.

C. Curb, gutter, or curb and gutter sections shall match sections of curbs and gutters removed. Construct Portland cement concrete curbs and gutters in accordance with Section 520 of the DOT Specifications.

D. Construct Portland cement concrete sidewalks in accordance with Section 522 of the DOT Specifications.

3.07 TEMPORARY PAVEMENT RESTORATION

A. On dead-end streets, collector streets, and high traffic streets, conduct trenching, pipe laying, and other construction activities so that that at least one-way traffic is maintained at all times.

B. Minimize amount of pavement, sidewalk, driveways, and curbing to be removed. Extent of pavement, sidewalk, driveway, and curbing removal shall not exceed that approved by the Engineer.

C. If restoration is incomplete at end of work day, backfill excavation or trench, as applicable, so that backfill is flush with existing pavement edges.

D. Temporary asphaltic patches are permitted when pavement restoration is incomplete at end of work day, but only with the approval of the Engineer. If approval is given for

a temporary patch, the cut shall be properly back-filled, with compaction meeting the density requirements specified, primed, then cold or hot mix asphaltic patch shall be applied. At such time when conditions are correct, temporary cold or hot mix asphaltic patch used shall then be removed and final asphaltic overlay shall be evenly applied, as required. Temporary patch may be utilized for a period from the commencement of the open cut, not to exceed 90 days from each cut.

E. Upon backfill and completion of the base, if the hot mix asphalt is not immediately placed and when authorized, a temporary cold or hot mix asphaltic patch with a smooth all-weather surface may be utilized.

F. Do not leave pavement unrepaired overnight. If Contractor wishes to repave all damaged areas at one time, and such request is approved by Engineer, a temporary cold or hot mix asphaltic patch with a smooth all-weather surface shall be installed immediately and maintained until final pavement restoration.

3.08 CLEAN-UP

A. Clean-up job site following pavement and surfacing restoration.

B. Remove rubbish, excess materials, temporary structures, and equipment.

C. Leave the Work in a neat and presentable condition.

END OF SECTION 32 02 23

THIS PAGE INSERTED SO THAT FIRST PAGE OF THE FOLLOWING SECTION STARTS ON THE FRONT FACE OF A PAGE PRINTED ON BOTH SIDES

SECTION 32 02 33

PLANTING RESTORATION

PART 1 – GENERAL

1.01 SUMMARY

A. Section Includes: Requirements for repair and restoration of lawn areas, bushes, shrubs, and trees.

1.02 REFERENCES

A. General: References to standards, specifications, manuals, or codes of any technical society, organization or association, or to the Laws or Regulations of any government authority, whether such reference be specific or by implication, shall mean the latest standard, specification, manual, code, or Laws or Regulations in effect at the time of opening of Bids (or, on the Effective Date of the Agreement if there were no Bids), except as may be otherwise specifically stated in the Contract Documents.

B. ASPA (American Sod Producers Association) - Guideline Specifications to Sodding.

C. FS O-F-241 - Fertilizers, Mixed, Commercial.

1.03 DEFINITIONS

A. Lawn areas are grassed areas which are cut and maintained on a routine basis, including, but not necessarily limited to, the following:

1. Grass areas with treatment and pumping facilities;
2. Lawns at homes, commercial establishments, and institutions; and
3. Grass shoulders of streets, roads, and highways.

B. Weeds: Includes Dandelion, Jimsonweed, Quackgrass, Horsetail, Morning Glory, Rush Grass, Mustard, Lambsquarter, Chickweed, Cress, Crabgrass, Canadian Thistle, Nutgrass, Poison Oak, Blackberry, Tansy Ragwort, Bermuda Grass, Johnson Grass, Poison Ivy, Nut Sedge, Nimble Will, Bindweed, Bent Grass, Wild Garlic, Perennial Sorrel, and Brome Grass.

C. The phrase "DOT Specifications" shall refer to the Florida Department of Transportation Standard Specifications for Road and Bridge Construction.

1.04 QUALITY ASSURANCE

A. Product Testing

1. Package standard products with manufacturer's certified analysis.
2. For other materials provide analysis by recognized laboratory. Analysis shall be made in accordance with methods established by Association of Official Agricultural Chemists, wherever applicable.

B. Sod

1. Sod Producer shall be company specializing in sod production and harvesting with minimum five years experience, and certified by the State of Florida.

2. Sod installer shall be company approved by the sod producer.
3. Sod age shall be 18 months, minimum. Sod shall have root development that will support its own weight, without tearing, when suspended vertically by holding the upper two corners.
4. Submit sod certification for grass species and location of sod source.

1.05 DELIVERY, STORAGE, AND HANDLING

A. General

1. Product Delivery: As specified in Section 01 65 00 Product Delivery Requirements.
2. Product Storage and Handling: As specified in Section 01 66 00 Product Storage and Handling.

B. Landscaping Products

1. Deliver packaged materials in containers showing weight, analysis, and name of manufacturer.
2. Protect plants and materials from deterioration during delivery and storage.
3. Time delivery so that plantings are installed within 16 hours of delivery. Store plants so that proper moisture content is maintained. Do not store plants in standing water.
4. Time delivery so that sod will be placed within 16 hours after stripping. Store and protect sod so that proper moisture content is maintained and rolled strips do not break. Protect exposed roots from dehydration.
5. Store products so that products are not damaged or deteriorated. Promptly remove damaged or deteriorated products for the job site. Replace damaged, deteriorated, or damaged and deteriorated products with new products that are not damaged or deteriorated.
6. Store products so that products are not dispersed by weather or construction activities. Replace products that are dispersed by weather of construction activities at no additional cost to the Owner.

1.06 JOB CONDITIONS

A. Plant trees, bushes, shrubs, and ornamental plants during the proper time and under the proper conditions for the particular plant.

PART 2 – PRODUCTS

2.01 TOP SOIL

A. Topsoil shall conform to Section 162 of the DOT Specifications.

B. Topsoil shall be excavated from site or imported.

2.02 PLANTING SOIL

A. Planting soil will be used with all trees and plants.

B. Planting soil shall be sandy loam and shall contain a 25% minimum amount of decomposed organic matter. Planting soil shall be free of clay, stones, plants, roots and other foreign materials which might be a hindrance to planting operations or be detrimental to good plant growth.

C. Planting soil shall be delivered in a loose friable condition and applied in accordance with the planting specifications.

D. Planting soil shall be approved by the Engineer before use.

E. Commercial fertilizer (with an element ratio of 6-6-6) shall be mixed in the soil at a rate of two pounds per cubic yard of planting soil.

2.03 SOD

A. Nursery grown grade; cultivated grass sod; type indicated below; with strong fibrous root system, free of stones, burned or bare spots.

B. Sod shall match existing sod.

2.04 FERTILIZER

A. Fertilizer for sod shall comply with Section 982 of the DOT Specifications.

2.05 MULCH

A. Mulch shall be shredded Eucalyptus Mulch grade "A".

B. Mulch shall be approved by the Engineer before installation.

2.06 WATER

A. Water shall be clean, fresh, and free of substances or matter which could inhibit vigorous growth of plants and grass.

2.07 ACCESSORIES FOR INSTALLATION OF SOD

A. Wood Pegs: Softwood; sufficient size and length to ensure anchorage of sod on slope.

B. Wire Mesh: Interwoven hexagonal metal wire mesh of 2 size.

PART 3 – EXECUTION

3.01 LANDSCAPE RESTORATION, GENERAL

A. Repair or replace lawn areas, trees, bushes, shrubs, and ornamental plants damaged during construction of the improvements included in this Contract unless otherwise shown on the Drawings. Replace lawn areas, trees, bushes, shrubs, and ornamental plants destroyed during construction of the improvements included in this Contract unless otherwise shown on the Drawings.

B. Remove and do not replace non-native, nuisance species, such a Melaleuca and Brazilian Pepper, from public right-of-way and utility property within project site.

C. Replacement of underbrush in fields and woods, along roads, along fence rows, and in other similar areas is not required, unless otherwise shown on the Drawings.

D. Install topsoil, fertilizer, and sod and do related work necessary to provide a complete turf cover in restored ditches, swales, and other surface water flow ways. Install topsoil, fertilizer, and sod and do related work necessary to provide a complete turf cover on all other lawn areas damaged during construction.

3.02 CUTTING TREES AND OTHER PLANTINGS

A. Do not indiscriminately cut or disfigure trees or other plants. Do not use herbicides on plantings or turf unless otherwise shown or specified.

B. The necessary trimming or cutting of trees by Contractor in the interest of public safety or continuity of facility service shall not be considered indiscriminate where such facilities cannot bypass the obstruction without violating the minimum clearance requirements.

3.03 GRADING

A. Fine grade all non-paved areas disturbed during construction.

B. Areas shall be smooth and uniform.

C. Finish elevations and grades shall be the same as elevations and grades prior to construction, unless otherwise shown on the Drawings.

3.04 INSPECTION

A. Verify that prepared soil base is ready to receive the work of this Section.

B. Beginning of installation means acceptance of existing site conditions.

3.05 PREPARATION FOR PLANTING

A. Grading: Establish finish grade, or subgrade, for planting trees, shrubs, and ornamental plants to within 0.2-foot, prior to beginning any planting.

B. Removal of Rubbish

1. Remove objectionable materials such as stones or construction debris encountered during planting operations. Remove objectionable materials from the project site.

2. Base material used for asphalt paving must be removed from sod and planting areas.

C. Staking Plant Pits: Plant materials shall be subject to inspection at any time by the Engineer to determine adherence to location, quality and size.

3.06 PROTECTION OF PLANTS

A. Root Protection

1. Balled and Burlapped Plants

a. Plants designated for relocation shall be dug with firm natural balls of earth of sufficient diameter and depth to encompass the fibrous and feeding root system, necessary for full recovery of the plant.

b. Plant balls shall be firmly wrapped with burlap or similar materials and bound with twine, cord or wire mesh.

c. Collected plants shall be balled and burlapped.

2. Container Grown Plants

a. Container grown plants shall meet plant sizes as shown on the Drawings or required for replacement of plants removed.

b. Container grown plant size shall not be governed by container sizes.

B. Protection During Transportation and Handling

1. Protect plant material from possible bark injury or breakage of branches.

2. Properly cover plants to plants so that windburn, drying or damage to plants is prevented.

C. Protection of Palms

1. Remove only a minimum of fronds from the crown of the palm trees to facilitate moving and handling.

2. Sabal Palm trunks shall be of uniform caliper and straight with tight "boots". Clear trunk with no fire damage shall be as specified after the minimum of fronds have been removed.

3. Sabal Palm fronds shall be tied in an upward position and the ties shall be left in place until the tree is well established in its new location.

4. Brace and stake palms with new, clean lumber of appropriate size and strength to resist tree displacement. Nails driven into trunk for support shall not be larger than 3/16 inch in diameter and must be driven in an upward direction. Provide strapped wood battens for nailing.

D. Field Grown Plants

1. After final setting, loosen burlap wrappings exposing top of the root ball, leaving the ball unbroken.

2. Remove excessive amounts of burlap to eliminate voids which may be caused upon decomposition.

E. Container Grown Plants

1. Container grown plants shall, when delivered, have sufficient root growth to hold earth intact when removed from container and shall not be root bound.

2. Plant pits for container grown materials shall be formed flat on the bottom to avoid air pockets at the bottom of root balls.

3. Remove containers carefully so plants and root systems are not damaged.

F. Pit Sizes for Trees and Plants Requiring Planting Soil

1. Minimum diameter (width) and depth of planting pits shall be as follows:

a. Trees: 12 inches greater than diameter of ball or spread of roots.

b. Shrubs: 6 inches greater than diameter of ball or spread of roots.

2. Depth

a. Trees: 4 inches greater than depth of ball or roots to provide 4 feet of topsoil backfill under the rootball. Large, heavy trees and shrubs may sit directly on unexcavated pit bottom if it is determined that undue settling may occur.

b. Groundcovers and Vines: Pits shall equal the plant pot depth plus one inch or conform to accepted nursery practice for the particular species.

G. Backfilling

1. When the pit has been excavated as specified above and the plant has been set, the pit shall be backfilled with planting soil at the following rates:

a. One-half cubic yard per tree.

b. One cubic yard per fifty shrubs.

H. Setting Trees and Shrubs

1. Unless otherwise specified, plant trees and shrubs in pits, centered, and set on four inches of compacted topsoil to such depth that the finished grade level of the plant after settling shall be the same as that at which the plant was grown. Plant trees and shrubs upright and faced to give the best appearance of relationship to adjacent structures.

2. Do not pull burlap out from under the balls. Remove platforms wire and surplus binding from top and sides of the balls.

3. Cleanly cut off broken or frayed roots.

4. Backfill planting soil shall be compacted thoroughly, and settled by watering. After the ground settles, additional soil shall be filled to the level of the finished grade, allowing for four inches of mulch.

5. Form a shallow saucer around each tree by placing a ridge of soil along the edge of the plant pit. This ridge shall be one inch high for each inch caliper of trunk to a maximum of four inches.

I. Pruning

1. Limit the amount of pruning to the minimum necessary to remove dead or injured twigs and branches and to compensate for the loss of roots as a result of transplanting operations.

2. Prune to retain typical growth habit for individual species with as much height and spread as is practicable.

3. Make all pruning cuts with a sharp instrument flush with "collar" of branch, in such a manner as to insure elimination of stubs.

J. Staking and Guying

1. Guy all trees one and one-half inches or more in caliper in three directions with double strands of No. 12 Galvanized wire attached to approved anchors driven below grade.

2. When securing wires to trees, cover wires which may come in contact with any part of tree with new 3/4-inch diameter rubber hose. Interlock hoses around tree trunk.

3. Place guys not less than 1/3 of the height of tree above finished grade and above substantial limbs one inch in diameter or more, if possible. Place anchors so that guys are equally spaced and at 45° angles to horizon. Keep guys tight until project completion.
4. Palms above six feet in height shall be supported and held in an upright position by staking and guying in accordance with best current horticultural and landscape practices, and in a manner acceptable to the Engineer.

K. Mulching

1. Mulch trees and shrub beds to a four-inch depth, immediately after planting. Apply Nitrogen before placing mulch.
2. Place mulch, and water in thoroughly.

3.07 PREPARATION OF SUBSOIL FOR SOD

A. Prepare subsoil to eliminate uneven areas and low spots. Maintain lines, levels, profiles and contours. Make changes in grade gradual. Blend slopes into level areas.

B. Remove foreign materials and undesirable plants and their roots. Do not bury foreign material beneath areas to be sodded. Remove contaminated subsoil.

C. Scarify subsoil to a depth of 4 inches where topsoil is to be placed. Repeat cultivation in areas where equipment, used for hauling and spreading topsoil, has compacted subsoil.

3.08 PLACING TOPSOIL FOR SOD

A. Spread topsoil to a minimum depth of 2 inches over area to be sodded.

B. Place topsoil during dry weather and on dry, unfrozen subgrade.

C. Remove vegetable matter and foreign non-organic material while spreading.

D. Grade to eliminate rough, low, or soft areas, and to ensure positive drainage.

3.09 APPLICATION OR FERTILIZER FOR SOD

A. Apply fertilizer in accordance with manufacturer's instructions.

B. Apply after smooth raking of topsoil and prior to installation of sod.

C. Apply fertilizer no more than 48 hours before laying sod.

D. Mix thoroughly into upper 2 inches of topsoil.

E. Lightly water to aid the dissipation of fertilizer.

3.10 LAYING SOD

A. Moisten prepared surface immediately prior to laying sod.

B. Lay sod within 16 hours after harvesting to prevent deterioration.

C. Lay sod tight with no open joints visible, and no overlapping; stagger end joints 12 inches minimum. Do not stretch or overlap sod pieces.

D. Lay smooth. Align with adjoining grass areas. Place top elevation of sod 1/2 inch below adjoining paving or curbs.

E. On slopes 6 inches per foot and steeper, lay sod perpendicular to slope and secure every row with wooden pegs at maximum 2 feet on center. Drive pegs flush with soil portion of sod.

F. Prior to placing sod on slopes exceeding 8 inches per foot or where indicated, place wire mesh over topsoil. Securely anchor sod in place over wire mesh and topsoil with wood pegs sunk firmly into the ground.

G. Water sodded areas immediately after installation. Saturate sod to 4 inches of soil.

H. After sod and soil have dried, roll sodded areas to ensure good bond between sod and soil and to remove minor depressions and irregularities. Roll sodded areas with roller not exceeding 150 pounds per foot of roller width.

3.11 MAINTENANCE

A. Maintain plants and sod until accepted by Owner for maintenance.

B. Mow grass at regular intervals during maintenance period to maintain at a maximum height of 2-1/2 inches.

C. Neatly trim edges and hand clip where necessary.

D. Immediately remove clippings after mowing and trimming.

E. Water plants to prevent dehydration and maintain proper plant moisture content.

F. Water sod to prevent grass and soil from drying out.

G. Roll surface of sod to remove minor depressions or irregularities.

H. Control growth of weeds. Apply herbicides in accordance with manufacturer's instructions. Remedy damage resulting from improper use of herbicides.

I. Immediately replace plants that die.

J. Immediately replace sod to areas which show deterioration or bare spots.

K. Protect plants and sod with warning signs during maintenance period.

END OF SECTION 32 02 33

SECTION 33 05 23.13

UTILITY HORIZONTAL DIRECTIONAL DRILLING

PART 1 – GENERAL

1.01 SUMMARY

A. Section Includes: Requirements for utility horizontal directional drilling.

B. Related Sections:

1. Utility Horizontal Directional Drilling Pipe: Section, or Sections, as follows:

a. Section 33 36 23.26 AWWA C906 HDPE Pipe and Fittings.

1.02 SUBMITTALS

A. General: As specified in:

1. Section 01 33 00 Submittal Procedures;

2. Section 01 33 23 Shop Drawings, Product Data, and Samples; and

B. Construction Drawings

1. Submit complete construction drawings and/or complete written description identifying details of the proposed method of construction and the sequence of operations to be performed during horizontal directional drilling construction, as required by the method of tunnel excavation approved. Drawings and description shall be sufficiently detailed to demonstrate to the Engineer whether the proposed materials and procedures will meet the requirements of this Section. Drawings shall show plan and profile of proposed horizontal direction drill.

2. CONTRACTOR shall submit to ENGINEER a minimum of thirty (30) days prior to drilling the pilot bore the proposed wire line tracking system locating equipment with surface grid verification for precise location and tracking of pilot bore, as indicated on the Drawings. Construction drawings shall include, but not necessarily limited to, the following items:

a. Complete details of the equipment, methods and procedures to be used, including but not limited to primary lining installation, timing of installation in relation to the excavation plan and sequence, etc.

b. Grouting techniques, including equipment, pumping procedures, pressure grout types, mixtures and plug systems.

c. Method of controlling line and grade of excavation.

d. Details of muck removal, including equipment type, number, and disposal location.

e. Proposed contingency plans for critical phases and areas of directional drilling.

3. Construction drawings shall be submitted on the following items only if deviations from the Contract plans are proposed.

a. Proposed contingency plans for critical phases and areas of directional drilling.

b. Proposed deviations from the Contract construction plans.

c. Proposed deviations from the Contract construction specifications.

d. Details of the proposed method of construction and the sequence of operations to be performed during construction only if deviations from the contract plans are proposed.

4. Contractor shall bring to the attention of the Engineer any known design issues based on Contractor's proposed drilling methods and/or procedures. This shall be stated in writing to the Engineer no later than the Preconstruction Conference.

C. Contractor's Geotechnical Consultant: Submit qualifications of Contractor's Geotechnical Consultant and Geotechnical Engineer, if Contractor performs additional borings and Geotechnical evaluation.

D Piping: Submit product data for horizontal direction drilling piping.

E. Work Sequence and Schedule: Submit a work sequence and schedule for each horizontal directional drill.

F. Horizontal Direction Drilling Equipment

1. Submit arrangement drawings and technical specifications of the machine and trailing equipment (including any modifications), three-year experience record with this type of machine and a copy of the manufacturer's operation manual for the machine.

2. Include information on how the bore is to be steered, the information recorded, and the pipe location verified for record drawings.

G. Drill Method

1. Submit proposed drill method a minimum of 30 days before starting drilling.

2. Drill method submittal shall include, but not necessarily limit to, the following:

a. Drilling Procedure. It is recognized and accepted that the Contractor may need to adjust drilling procedures and equipment as new information is developed during the drill. The intent of the drill method submittal is to provide the contractor's initial approach to the project specific subsurface and permit conditions to demonstrate constructability based on conditions presented in the Geotechnical Report.

b. Drawings. Submit scaled plan showing the following:

1) Work zone equipment configuration at each end of the drill; pipe staging and assembly and pipe storage areas;

2) Location of drill fluid, HDPE pipe, water supply for drilling, cuttings, pit spoil handling areas; and

3) Storm water containment measures, devices and locations.

4) Proposed pilot bore tunnel size, proposed drilling fluid composition, proposed viscosities, proposed pre-ream procedures, and final tunnel size.

c. Maximum Pipe Pull-back Forces: Submit anticipated maximum pipe pull-back forces based on proposed drill path plan and profile.

d. Drill Fluid Loss Monitoring/Frac-Out Plan. Submit materials list including bentonite and bentonite additives for the project along with respective MSDS for all materials used on the site.

H. Tracking Coordination

1. Submit proposed tracking coordination plan a minimum of 30 days prior to drilling.
2. The intent of this submittal is to coordinate the contractor activities with the tracking specialist.
3. Submit proposed directional drilling locating equipment and method of locating direction drill.
4. Include manufacturer's data sheets and calibration on the tracking equipment and sample data recording log sheets.

I. Personnel and Experience

1. Provide a list of key personnel for the project including superintendent, driller, and tracking specialists.
2. Prior to approval for horizontal directional drilling, submit the names of supervisory field personnel and historical information of directional boring experience.

J. Quality Control

1. At least 10 days prior to the start of directional drilling, Contractor shall submit a description of the quality control methods Contractor proposes to use.
2. Submittal shall describe:

   a. Procedures for controlling and checking line and grade.

   b. Equipment specifications for checking line and grade

   c. Field forms for establishing and checking line and grade.

   d. Anticipated product pipe pullback forces

K. Safety.

1. Submit procedures including, but not limited to, monitoring for gases encountered.
2. Submit hazardous chemical list as well as all MSDS and technical data sheets.

L. Cuttings, Bentonite Slurry, and Pit Spoil Disposal

1. Submit within 30 days of completion of the drills a list of volumes of all cuttings, bentonite slurry, pit spoil disposed of off-site and the location of the disposal area and the actual original delivery tickets from the disposal operation.

1.04 QUALITY ASSURANCE

A. Specialty Directional Boring Contractor and Specialty Directional Boring Contractor Personnel Qualifications

1. General: Specialty Directional Boring Contractor shall be pre-approved by the Owner, unless otherwise specified.

2. Horizontal Directional Drill More than 300 feet Long and/or Subaqueous Horizontal Directional Drill

a. Specialty Directional Drilling Contractor

1) Specialty Directional Drilling Contractor shall have a minimum of five years of verifiable experience and shall provide documentation of successful job completion relevant to the specific application to this job.

2) Directional Drilling Contractor shall provide ten job references where the contractor has successfully performed similar work within the last five years.

3) For subaqueous crossing horizontal direction drills, Directional Drilling Contractor shall provide not less than two references where the contractor has successfully performed subaqueous crossings similar to that required for this Project. Reference projects shall meet the following requirements:

a) Length shall be equal to, or greater than, length of proposed horizontal directional drill;

b) Pipe diameter shall not be less than diameter of proposed horizontal directional drill;

c) Wireline tracking (or equally accurate steering and tracking method) was used;

d) Directional drill rig shall be rated to not less than thrust required for this Project; and

4) Conventional trenching experience will not be acceptable, unless otherwise specified.

5) Contractor shall provide documentation showing successful completion of the projects used for reference.

6) References shall include a name and telephone number where contact can be reached to verify the CONTRACTOR's capability.

B. Specialty Directional Drilling Contractor's Personnel

1) On-site supervisory personnel shall be experienced and competent, thoroughly familiar with the equipment and type of work being performed, and shall be in direct charge and control of the operation at all times

2) Supervisor assigned to this project shall be experienced in work of this nature and shall have successfully completed similar projects using Horizontal Directional Drilling in the last three years.

3) Submit a description of such project(s), which shall include, at a minimum, a listing of the location(s), date of project(s), owner, pipe type and size, length of installation, steering and tracking system employed, type and

manufacturer of equipment used and other information relevant to the successful completion of the project.

C. Testing: Testing of horizontal directional drilling shall be as specified in this Section.

1.05 DELIVERY, STORAGE, AND HANDLING

A. Product Delivery: As specified in Section 01 65 00 Product Delivery Requirements.

B. Product Storage and Handling: As specified in Section 01 66 00 Product Storage and Handling.

1.06 PROJECT/SITE CONDITIONS

A. Safety Requirements

1. Perform work in a manner to maximize safety and reduce exposure of workers and equipment to hazardous and potentially hazardous conditions, in accordance with applicable safety standards.

2. Whenever there is an emergency or stoppage of work which is likely to endanger the excavation or adjacent structures, operate a full work force for 24 hours a day, including weekends and holidays, without intermission until the emergency or hazardous conditions no longer jeopardize the stability and safety of the work.

B. Geotechnical Data

1. Geotechnical data prepared by the Geotechnical Engineer for this Project are available for review by the Contractor and will be provided by the Engineer upon request.

2. Data and recommendations in the subsurface investigation report have been used by the Engineer in the preparation of the Drawings and Specifications.

3. Geotechnical Data made available to the Contractor by the Engineer are not guaranteed as to their accuracy or completeness, and therefore the Contractor shall assume all risks resulting from actual conditions differing from conditions set out in the Geotechnical Data.

C. Safety Requirements

1. Perform work in a manner to maximize safety and reduce exposure of men and equipment to hazardous and potentially hazardous conditions, in accordance with applicable safety standards.

2. Whenever there is an emergency or stoppage of work which is likely to endanger the excavation or adjacent structures, operate a full work force for 24 hours a day, including weekends and holidays, without intermission until the emergency or hazardous conditions no longer jeopardize the stability and safety of the work.

D. Unanticipated Conditions

1. Notify Engineer of unexpected subsurface conditions and discontinue work in affected area until notified by Engineer to resume work.

2. Take emergency measures as required to protect persons and improvements.

E. Hazardous Material

1. If hazardous material is observed, immediately stop work in connection with observed hazard, or take emergency measures, make notifications and take actions as specified in the General Conditions and this Section.
2. Should special measures be required for handling of hazardous material, the cost and time of performance for providing such special measures will be addressed by an appropriate Change Order, by separate contact, or by separate subcontract with the Owner as provided in the General Conditions.

F. Environmental Requirements

1. CONTACTOR shall perform horizontal directional drilling in accordance with all of the permit requirements and stipulations of the approved SWFWMD ERP General Permit for utility subaqueous directional drill crossing.
2. Do not perform horizontal directional drilling during storms, torrential rains, or high winds.
3. Monitor climatic conditions and anticipate conditions producing rainfall. Do not start horizontal directional drilling when storms, torrential rains, or high winds are forecast to occur within the next 2 hours. Stop horizontal directional drilling as appropriate, and secure horizontal directional drilling site before storms, torrential rains, or high winds occur.
4. Conduct horizontal directional boring operations by methods and with equipment, which will positively control dust, fumes, vapors, gases or other atmospheric impurities in accordance with applicable environmental requirements.

G. Utility and Structure Protection

1. Utility lines and structures indicated on the drawings, which are to remain in service, shall be protected damage as a result of horizontal directional drilling operations. Where utility lines or structures not shown on the drawings are encountered, the Contractor shall report them to the Engineer before proceeding with the work. The Contractor shall repair or replace utility lines or structures, which are broken or damaged by their operations, at no additional cost to the Owner.
2. All utilities that may be impacted by horizontal directional drilling shall be exposed through a “pot-hole” or other opening, in accordance with state utility locate laws and regulations, to ensure, through visual inspection, that the drill, reamer, or product pipe will not cause damage to the utility.

PART 2 – PRODUCTS

2.01 DRILLING FLUID

A. Use a high quality bentonite drilling fluid or equivalent to ensure hole stabilization, cuttings transport, bit and electronics cooling, and hole lubrication to reduce drag on the drill pipe and the product pipe.

B. Oil based drilling fluids or fluids containing additives that can contaminate the soil or groundwater will not be considered acceptable substitutes.

C. Composition of the fluid shall comply with all federal and local environmental regulations.

PART 3 – EXECUTION

3.01 HORIZONTAL DIRECTIONAL DRILLING

A. General

1. Provide all necessary tools, materials and equipment to successfully complete the installation of directionally drilled piping as specified in this Section and shown on the drawings. CONTRACTOR shall be responsible for the final constructed product, and for furnishing qualified labor and superintendence necessary for this method of construction. CONTRACTOR shall be responsible for his means and methods of directional drilling construction and shall ensure the safety of the work, CONTRACTOR's employees, the public, and adjacent property, whether public or private.

2. Comply with all local, state and federal laws, rules, regulations and permits at all times to prevent pollution of the air, ground and water.

3. Methods of excavation, lining, and groundwater control shall be compatible.

4. Furnish all items necessary to perform the horizontal directional drilling operation and construct the pipe to the lines and grade shown on the drawings. Project work tasks include completion of the drilling, pulling operations, horizontal directional drilling installation pressure testing, and final connection of piping installed as part of the horizontal directional drilling to open-cut piping. Horizontal directional drilling shall include the following work elements:

   a. Drilling of the pilot hole and the reaming of the hole sufficient to install the HDPE pipe.

   b. Assembly and installation of HDPE pipe including:

      1) Thermal fusion welding the HDPE pipe sections for temporary staging.

      2) Pulling the HDPE fused pipe string-out, in a continuous pullback operation.

   c. Following HDPE pipe pullback, cutting HDPE pipe stub outs and installing temporary thermal fusion welded HDPE cap on both ends of the HDPE pipe stub outs, and performing pressure testing with water to verify pipeline integrity.

5. Boring shall use techniques of creating or directing a borehole along a predetermined path to a specified target location. This shall involve use of mechanical and hydraulic deviation equipment to change the boring course and the use of instrumentation to monitor location and orientation of boring head assembly along a predetermined course.

   a. Develop, provide, and operate a Drill Fluid Loss Monitoring Program as follows:

      1) Drill Fluid Loss Monitoring Program shall insure the following:

         a) Site specific storm water control measures relative to horizontal direction drilling shall meet the requirements of the FDEP Best Management Practices guidelines. Storm water control measures shall include, as a minimum, onsite silt fence and sandbags or other mechanical means located between the construction operations and any adjacent water body. Storm water control measures shall provide

positive containment of uncontrolled fluids on the site resulting from spills or overtopping of drill pits from heavy rainfall and prevent fluids from reaching adjacent water body, or bodies.

b) Provide positive containment of uncontrolled fluids on the site resulting from spills or overtopping of drill pits from heavy rainfall.

c) Prevent fluids from reaching the adjacent water bodies, per SWFWMD ERP permit requirements.

d) Dispose of drilling fluids. Conduct drilling fluid disposal in compliance with applicable environmental regulations, right-of-way and workspace agreements and permit requirements.

e) Drilling fluid returns can be collected in the entrance pit, exit pit, or spoils recovery pit. Immediately clean up any drilling fluid spills or overflows from these pits.

2) Drill Fluid Loss Monitoring Program shall include the following:

a) Observations along drill path during drilling and reaming operations;

b) Equipment for spill control remediation including, but not necessarily limited to, vac trucks, sand bags, and pumps; emergency spill and leakage control materials and equipment including diapers, absorbent material and other fuel and oil spill containment and cleanup materials;

c) Drill fluid loss monitoring and containment.

d) Drill rig instrumentation, including remote-monitoring electronic data recording features, to monitor drill fluid pressures and volumes and rates at pits, tanks, pumps, and drill rig operations;

e) Drill fluid properties measuring equipment; and

f) Properly trained field engineer to monitor and maintain the instrumentation.

3) Provide drill fluid Loss Circulation Materials (LCM's) on site ready for use if needed.

b. Equipment shall be in functional and in proper working order during all drilling operations.

c. Provide data to the Owners' representative daily or on request. Provide a complete package of recorded data to the Owner following completion of the drill.

6. Accomplish drilling with fluid-assisted mechanical cutting. Boring fluids shall be as specified in this Section. Use boring fluid sealants and water to lubricate and seal the bore hole. Use minimum pressures and flow rates during drilling operations as not to fracture the sub-grade material around and or above the bore.

7. Mobile drilling system shall utilize small diameter fluid jets to fracture and mechanical cutters to cut and excavate the soil as the head advances forward.

8. Accomplish steering by installation of an offset section of drill stem that causes the cutterhead to turn eccentrically about its centerline when it is rotating. When steering adjustments are required, the cutterhead offset section shall rotate toward

the desired direction of travel and the drill stem shall advance forward without rotation. Control of tunnel line and grade shall meet the requirements of this Section.

9. The mobile drilling system shall be capable of being launched from the surface at an inclined angle and drilling a pilot hole with a diameter appropriate to the size, length, and configuration of the directional drill. The pilot hole shall then be enlarged with reamers as required.

10. Develop and provide certified as-built plans, signed and sealed by a Professional Land Surveyor licensed in the State of Florida, in accordance with Section 01 71 23 Field Engineering.

B. Geotechnical Data

1. Geotechnical data provided by the Engineer has been used by the Engineer in the preparation of the Drawings and Specifications, as specified in this Section.

2. Additional soil borings required by the Contractor in the preparation of detailed design and construction drawings shall be provided by the Contractor. Additional borings required by the Contractor shall be provided at no additional cost to the Owner.

3. If the Contractor provides additional soil borings, Contractor shall submittal name of Contractor's Geotechnical Consultant and name of Geotechnical Engineer responsible for Contractor's additional borings.

4. Do not proceed with additional boring until Contractor's Geotechnical Consultant submittal has been approved by the Engineer.

C. Drill Entrance and Exit Pits

1. Contractor shall be responsible for design and construction of the drill entrance and exit pits. Supports may be required to maintain safe working conditions, ensure stability of the pit, minimize loosening, and minimize soil deterioration and disturbance of the surrounding ground.

2. Locate all utilities prior to start of excavation or drilling. All utilities crossed or approached within 48 inches in a lateral direction shall be exposed to verify location. In addition, visual verification shall be required that the drill, reamer, or product pipe has missed the utility as it passes. Repair, or replace, damaged utilities as required at no additional cost to the Owner.

3. Any soil borings required for the Contractor’s detailed designs shall be provided by the Contractor and included in the bid.

D. Pilot Hole and Boring Hole

1. Drill pilot hole so that the required vertical clearances from ditch, river, or wetland bottoms and utilities and horizontal clearances from jurisdictional or buffer lines and utilities are maintained. If pilot hole exits in jurisdictional or buffer areas, grout hole to satisfaction of the environmental regulators and the Engineer.

2. Ream boring hole to be 120% to 150% oversized than the HDPE product pipe OD. Use drilling mud, usually fluidized bentonite clay to stabilize the hole and remove soil cuttings. Monitor and record the reamed hole location and depth at the same intervals as the bore hole.

3. During the entire drilling and reaming operations, monitoring of the drilling processes will be critical. Pit Volumes for all mud tanks, SPM sensors for pumps, drilling fluid flow and pressures, rotary torque, hook load sensor, depth and azimuth tracking and monitoring sensors, shall be monitored and recorded.

E. No-drill Zone: For subaqueous horizontal directional drilling, do not drill above the No-Drill Zone as defined by a plane parallel to the mud line located below the mudline, as indicated on the Drawings.

F. Pull-back

1. Pull-back operations shall include pulling the entire pipe string-out, in one segment, as appropriate to the directional drill length, back through the reamed hole and drilling mud. Pull-back operations may include filling the product pipe with water to reduce the buoyancy and to reduce the pull back forces required to pull-back the product pipe in the borehole. Pipe handling, cradling, bending minimization, surface inspection, and fusion welding procedures for HDPE piping shall be as specified in this Section and the following Section, or Sections, as appropriate:

   a. Section 33 36 23.26 AWWA C906 HDPE Pipe and Fittings.

2. Operation shall be continuous with no stoppage. Pullback speed shall be 1 to 2 feet per minute, unless otherwise accepted by the Engineer.

3. Provide a breakaway device or “weak-link” at the leading end of the PE pipe during pullback operations to protect the pipe from damage if the pulling load gets too high. Breakaway strength for the weak-link device shall be set so that the allowable tensile load of the product pipe cannot be exceeded. Alternative methods for ensuring that the pull loads will not exceed the product pipe allowable tensile load may be considered.

G. “Frac-outs” or “Blow holes”

1. Immediately report “Frac-outs” or “Blow holes” of drilling fluid to the surface to the Engineer and the Owner’s representative. Following Engineer's and or Owner's representative observation of “Frac-outs” or “Blow holes” clean up surface area, wash affected area, and return affected are to original condition, unless otherwise directed.

2. Dispose of drilling fluids, spoils, and separated material in compliance with federal and local environmental regulations.

H. Obstructions

1. If, during boring, an obstruction is encountered which prevents completion of the bore in accordance with the design location and specification, and the product pipe is abandoned in place and taken out of service, the failed bore shall be filled with cement grout.

2. Record drawings shall show the failed bore path along with the final bore path on the as-built plans.

I. Lost or Damaged Horizontal Directional Drill

1. Should the horizontal directional drill crossing be lost or damaged while the Contractor is engaged in the performance of the work, repair, or replace, damaged crossing, as appropriate to field conditions, at no additional cost to the Owner.

2. Failure to complete the crossing or partially completed crossing by directional drilling or as approved by Engineer and Owner will result in forfeiture of all payment.

3.02 CONTROL OF THE TUNNEL LINE AND GRADE

A. Establish and use means and methods for the accuracy of control for the construction of the entire directional bore, including structures, tunnel line and grade.

B. Establish control points sufficiently far from the tunnel operation not to be affected by construction operations.

C. Maintain daily records of alignment and grade and submit three copies of these records to the Engineer. Submittal of daily records of alignment and grade shall not relieve the Contractor of accuracy of Contractor's work and the correction of Contractor's work, as required.

D. Check control for the bore alignment against an above ground undisturbed reference at least once each hour and at least once for every drill rod, or more often as needed or directed by the Engineer.

3.03 DIRECTIONAL DRILLING DATA

A. Daily logs of construction events and observations shall be submitted on at least the following:

1. Alignment and Grade of Pilot Bore.

2. Location and elevation of significant soil strata boundaries and brief soil descriptions.

3. Jacking pressures and torsional forces, if applicable.

3.04 GROUNDWATER

A. Anticipate that portions of the drilled excavation will be below the groundwater table.

B. Dewatering shall meet the requirements of Section 31 23 19 Dewatering.

C. Where such effort is necessary, cost for groundwater control during the course of the tunnel work shall be included in the bid.

D. Dewatering required during the course of the project to lower water table, to remove standing water, surface drainage seepage, or to protect ongoing work against rising waters of floods shall be considered incidental to the work being performed.

3.05 EQUIPMENT

A. Diesel, electrical, or air-powered equipment will be acceptable, subject to applicable federal and state regulations.

B. Any method or equipment that the Contractor can demonstrate will produce the specified results will be considered.

C. Employ equipment that will be capable of handling the various anticipated ground conditions, in addition, the equipment shall be capable of minimizing loss of ground ahead of and around the machine and providing satisfactory support of the excavated face at all times.

D. Provide a system to indicate whether the amount of earth material removed is equivalent to that displaced by the advance of the machine such that the advance rate may be controlled accordingly.

E. Provide adequate secondary containment for any and all portable storage tanks.

3.06 CLEAN UP OF HORIZONTAL DIRECTIONAL DRILLING SITE

A. Immediately upon completion of work, remove rubbish and debris from the job site.

B. Construction equipment and implements of service shall be removed and the entire area involved shall be left in a neat, clean, and acceptable condition.

3.07 DISPOSAL OF EXCESS MATERIAL

A. Excess material from tunnel construction shall be removed from Project site and disposed of by the Contractor.

B. Dispose of excess material, removed from the Project, in landfill specifically approved and permitted by Florida Department of Environmental Protection to receive specific material.

C. Do not dispose of excess material elsewhere.

END OF SECTION 33 05 23.13

SECTION 33 36 13.03

PIPE, FITTINGS, VALVES, PIPING SPECIALTIES, AND ACCESSORIES - GENERAL

PART 1 – GENERAL

1.01 SUMMARY

A. Section Includes: General requirements for pipe, fittings, valves, piping specialties, and accessories.

1.02 DEFINITIONS

A. Buried Pipe, Fittings, Valves, and Piping Specialties: Pipe, fittings, valves, and piping specialties installed in trenches and covered with soil. Pipe, fittings, and piping specialties beneath structures and encased in concrete.

B. Exposed Pipe, Fittings, Valves, and Piping Specialties: Pipe, fittings, valves, and piping specialties that are not buried. Exposed pipe, fittings, valves, and piping specialties includes the following:

1. Pipe, fittings, valves, and piping specialties outdoors aboveground;
2. Pipe, fittings, valves, and piping specialties in buildings;
3. Pipe, fittings, valves, and piping specialties on the interior of tanks;
4. Pipe, fittings, valves, and piping specialties on the interior of vaults; and
5. Pipe, fittings, valves, and piping specialties on the interior of pits.

C. Piping Size References: Pipe, fitting, and valve, sizes and references to pipe diameter on the Drawings and in the Specifications are intended to be nominal size or diameter, and shall be interpreted as nominal size or diameter.

1.03 SUBMITTALS

A. General: As specified in:

1. Section 01 33 00 Submittal Procedures;
2. Section 01 33 23 Shop Drawings, Product Data, and Samples; and
3. This Section.

B. Product Data: Submit product data as specified in individual specification sections appropriate to potable water pipe and fittings, valves, piping specialties, and accessories.

PART 2 – PRODUCTS

2.01 PIPE, FITTINGS, VALVES, PIPING SPECIALTIES, AND ACCESSORIES - GENERAL

A. All pipe, fittings, valves, piping specialties, and accessories shall be new and unused.

B. Potable transmission pipe, fittings, valves, and piping specialties shall be as shown on the Drawings and as specified in the individual specification Section applicable to the product furnished.

2.02 OPERATORS AND ACTUATORS FOR UTILITY VALVES - GENERAL

A. Operators for Buried Piping Valves

1. Provide buried valves with operators, valve boxes, and extension stems.

2. Buried shut-off valves with valve boxes shall have position indicator on extension stem beneath valve box lid.

B. Operators for Exposed Piping Valves

1. Provide exposed valves with valve operators, levers, handwheels, chainwheels and chains, extension stems, bonnet extensions, floor stands, or other accessories as shown, specified, or shown and specified.

2. Manual operators for exposed valves shall have levers, handwheels, or chainwheels and chains, unless otherwise shown.

a. Effort required to operate valve lever shall not exceed 40 pounds applied at the extreme grip position of the lever.

b. Effort required to operate valve handwheel shall not exceed 40 pounds applied at the extremity of the wheel.

1) Handwheels on valves 14-inch and smaller shall not be less than 8 inches in diameter.

2) Handwheels on valves larger than 14-inch shall not be less than 12 inches in diameter.

c. Effort required to operate valve chain shall not exceed 40 pounds applied at the chain.

3. Operators shall have open direction clearly and permanently marked. Exposed operators shall have position indicators.

4. Valve operators shall be provided by the valve manufacturer. Valves and operators of a given type shall be furnished by the same manufacturer. Valve operators shall be installed, adjusted, and tested by the valve manufacturer at the valve manufacturer's plant.

5. Operators, unless otherwise specified, shall turn counter-clockwise to open.

C. Chainwheel Operators for Piping Valves

1. Chainwheel operator shall be fabricated of malleable iron and pocketed type chainwheels with chain guards and guides.

2. Operators shall have galvanized smooth welded link type chain. Chain that is crimped or has links with exposed ends shall not be acceptable.

3. Chainwheel operators shall be marked with an arrow and the word OPEN indicating direction to open.

D. Actuators for Piping Valves

1. Provide buried valve and exposed valves with valve actuators and accessories as shown, specified, or shown and specified.
2. Valve actuators shall be provided by the valve manufacturer. Valves, actuators of a given type shall be furnished by the same manufacturer.
3. Valve actuators, not manufactured by the valve manufacturer, shall be field installed unless otherwise shown, or specified.

PART 3 – EXECUTION (not used)

END OF SECTION 33 36 13.03

THIS PAGE INSERTED SO THAT FIRST PAGE OF THE FOLLOWING SECTION STARTS ON THE FRONT FACE OF A PAGE PRINTED ON BOTH SIDES

SECTION 33 36 13.04

PIPING INSTALLATION - GENERAL

PART 1 – GENERAL

1.01 SUMMARY

A. Section Includes: General requirements for installation of pipe, fittings, valves, piping specialties, and appurtenances.

1.02 QUALITY ASSURANCE

A. Field Tests: Perform hydrostatic tests on installed piping as specified in Section 33 36 13.06 Piping Testing.

PART 2 – PRODUCTS

2.01 GENERAL

A. Pipe, fittings, valves, piping specialties, and appurtenances installed as part of Work shall be new and unused, unless otherwise shown or specified.

B. New pipe, fittings, valves, piping specialties, and appurtenances installed as part of Work shall be as specified in other Sections, as appropriate.

PART 3 – EXECUTION

3.01 HORIZONTAL AND VERTICAL SEPARATION

A. Horizontal Separation: Horizontal separation between potable water piping and wastewater force main and sewer piping shall preferably not be less than ten feet measured edge of pipe to edge of pipe

B. Vertical Separation

1. Vertical separation between potable water piping and wastewater force main and sewer piping shall not be less than 12 inches measured edge of pipe to edge of pipe.

2. Crossings shall be arranged so that joints of wastewater force main and sewer piping are equidistant and as far as possible from water main joints.

C. Casing Pipe: Where it is impossible to obtain horizontal, vertical, or horizontal and vertical separation specified in this Section, furnish and install casing pipe as follows:

1. Either the potable water pipe or the wastewater force main and sewer pipe shall be installed in a watertight casing pipe.

2. Casing pipe shall extend to a point where separation between potable water piping and the wastewater force main and sewer piping shall not be less than ten feet measured edge of pipe to edge of pipe.

3. Casing pipe shall be installed and tested to 150 psi before conveyance pipe is installed in casing pipe.

3.02 PIPING INSTALLATION - GENERAL

A. Provide and use proper implements, tools and facilities required for the safe and convenient prosecution of the work. Provide and use implements, tools and facilities satisfactory to the Engineer.

B. Install piping to lines, grades, elevations, or lines, grades and elevations shown on Drawings.

1. Install piping with continuous grade between elevations shown on Drawings, unless otherwise shown or specified.

2. Provide grade changes as required to avoid interferences and as required to provide separation distances specified in this Section.

3. Where piping is to be constructed parallel to and close to existing buried utilities, the exact location of which is unknown, adjust alignment of piping to meet the following requirements:

a. Minimize interference with existing buried utilities, unless otherwise shown or specified; and/or

b. Meet separation requirements specified in this Section.

4. Wherever possible, install exposed pipe parallel to walls and floors.

5. Make changes in directions or elevations with fittings, by deflecting pipe joints, or with fittings and deflecting pipe joints. Do not exceed deflections specified in the appropriate pipe and fitting material Section or recommended by the joint manufacturer, whichever is more stringent.

C. Do not lay pipe in water or when trench or weather conditions are unsuitable for proper installation.

D. For piping systems, such as transmission mains, in which the flow through pipe is in one direction, install pipe bells on upstream end of pipe.

E. Clean pipe, fittings, valves, and piping appurtenances before installation. Do not place debris, tools, clothing, lumber, or other materials in pipe during installation. Keep pipe, fittings, valves, piping specialties, and appurtenances clean until accepted in completed Work.

F. Do not damage pipe, fittings, valves, piping specialties, and appurtenances, including linings, coatings and encasement, during installation.

1. Remove and replace damaged pipe, fittings, valves, piping specialties, and appurtenances.

2. Remove damaged products from job site.

3. Remove and replace damaged products at no additional cost to Owner.

G. Properly protect installed piping at all times.

1. Whenever pipe installation laying is interrupted, including lunch time and break time, protect the open ends of all pipes against entrance of animals, children, earth, or debris by bulkheads or stoppers.

2. Secure installed piping so that piping is not dislodged.
3. Remove any earth, debris, or other material that gets into piping.

3.03 INSPECTION

A. Inspect pipe, fittings, valves, piping specialties, and appurtenances prior to installation.

B. Reject and promptly remove pipe, fittings, valves, piping specialties, and appurtenances that do not meet the Specifications. Remove rejected products from the job site.

3.04 PLACING PIPING PRODUCTS INTO TRENCH

A. Carefully lower pipes, fittings, valves, and piping specialties into trench piece-by-piece by means of a derrick, ropes or other suitable tools or equipment. Carefully lower and place pipes, fittings, valves, and piping specialties so that products, product coatings, and product linings are not damaged.

B. Lower each length of pipe separately. Lower each fitting, and valve separately. Fittings may be assembled before being lowered into trench if fitting joints are fully restrained while fitting assembly is lowered into trench.

C. Do not drop or dump pipes, fittings, valves, or piping specialties into trench.

3.05 BELL HOLES, TRENCH GRADING, PIPE BEDDING, AND HAUNCHING

A. Excavate bell holes in advance of pipe laying. Bell hole shall be no larger than necessary to accomplish proper joint assembly. After joint has been made, fill void under bell with bedding material specified for pipe bedding. Compact bell hole fill material to provide adequate support to pipe throughout entire length of pipe.

B. Grade trench so that invert of installed piping conforms to required elevations, slopes, and alignment. Grade trench so that pipe bottom is uniformly and continuously supported by firm bedding and foundation.

C. Subgrade preparation and bedding shall be as specified in the appropriate Division 31 Section for subgrade preparation and bedding.

D. Haunching and trench backfill shall be as specified in Section 31 23 43 Pipe Haunching and Backfill.

3.06 INSTALLING VALVES, GENERAL

A. Clean interiors of valves of foreign matter before installation. Tighten stuffing boxes. Inspect valves in opened and closed positions to insure parts are in working condition.

B. Verify operator orientation with Engineer prior to valve installation. If valve orientation is not verified with Engineer prior to valve installation, changes to orientation shall be made at no additional cost to the Owner.

C. Install valves so that valves can be operated as intended.

1. Install exposed valves with easy access for operation, removal, and maintenance.
2. Install buried valves level unless otherwise shown on the Drawings.

D. Install valves so that there are no conflicts between valve operators and equipment, structural members, railing, or other piping.

E. Support exposed valves so that there is no undue stress on connecting pipe or fittings.

F. Install valves, sensors, switches, and controls so that all system components are compatible and operate properly.

3.07 JOINING PIPE, FITTINGS, AND VALVES, GENERAL

A. Assemble joints in accordance with recommendations of manufacturer of each particular type of joint and as specified in individual piping material Sections.

B. Joint work shall be done by experienced workmen.

C. Clean joints before assembling pipe, fittings, and valves.

3.08 INSTALLING ADAPTERS, SLEEVES, SADDLES, UNIONS, AND OTHER PIPING SPECIALTIES

A. General

1. Install couplings, adapters, sleeves, saddles, unions, and other piping specialties, in piping as indicated on the Drawings.

2. Install piping specialties in accordance with the manufacturer's written instructions and as specified in this Section.

B. Equipment Connections, General

1. Attach piping to pumps and other equipment in accordance with respective manufacturers' recommendations.

2. Use flexible connectors where required to prevent excess load, vibration, or load and vibration on pumps and other equipment.

C. Unions: Locate and install unions for piping assembled with threaded, solvent-cement, welded, or solder joints, so that piping can be disassembled and disconnected from pumps and equipment without cutting pipe.

3.09 CONNECTING TO EXISTING PIPE

A. General

1. Locate existing pipe horizontally and vertically and verify exact size of existing pipe.

2. Locate existing pipe sufficiently in advance of making connections to allow ample time for making changes in connection location and size.

B. Wet Connections

1. Make each wet connection with a tapping valve and tapping sleeve.

2. Install tapping sleeve and valve in accordance with manufacturer’s written instructions.

3. Hydrostatically test tapping valve and tapping sleeve assembly prior to tapping existing pipe. Test pressure shall not be less than test pressure for piping system connecting to tap specified in Section 33 36 13.06 Piping Testing.

4. Open and close tapping valve.

5. Inspect tapping valve in opened and closed positions. Make certain tapping valve is in working condition.
6. Inspect tapping valve immediately before connecting tapping machine, and verify that tapping valve is open.
7. Tap pipe with tapping machine.
8. Install watertight plug on tapping valve outlet and backfill excavation if existing pipe is not tapped within 48 hours after installing tapping valve and tapping sleeve or tapping saddle assembly. Install watertight plug on valve outlet and backfill excavation if new piping is not connected to tapping valve within 48 hours after making tap in existing pipe.

C. Dry Connections

1. Make each dry connection with fittings and valves indicated on Drawings.
2. Provide sleeves, adapters, or sleeves and adapters required to complete connections.
3. Required pipe, fittings, valves, tools, and equipment shall be at connection site prior to starting connection.
4. Make connections at night and on weekends when existing piping can only be removed from service during minimum flow periods.
5. Owner will operate existing valves.
6. Install sufficient pipe, restrained joints, thrust blocking, or pipe, restrained joints and thrust blocking so that existing pipe can be put in service immediately after connection is completed.
7. Inspect joints and eliminate leaks immediately after connection is completed and existing pipe is put in service.
8. Install watertight plugs on open ends of pipe and valves and backfill excavation if new piping is not connected to dry connection within 48 hours after completing dry connection.

3.10 CONNECTING PIPE TO WALL PIPE AND WALL SLEEVES

A. Wall Pipe

1. Align pipe connecting to wall pipe so that pipe is centered on wall pipe joint.
2. Align pipe connecting to mechanical joint wall pipe so that wall pipe joint deflection meets the requirements specified in Section 33 36 23.24 AWWA C900 and C905 PVC Pipe and Fittings.
3. Align pipe connecting to push-on joint wall pipe so that wall pipe joint deflection meets the requirements specified in Section 33 36 23.24 AWWA C900 and C905 PVC Pipe and Fittings.
4. Align exposed pipe connecting to flange joint wall pipe so that there is no joint deflection.

B. Wall Sleeves

1. Align pipe passing through wall sleeve so that pipe is centered in wall sleeve.

2. Align pipe passing through wall sleeve so that pipe is parallel to wall sleeve.

3.11 THRUST RESTRAINT FOR BURIED PRESSURE PIPING

A. General

1. Provide restrained joints at bends, elbows, tees, plugs, tapping sleeves, and tapping saddles as specified in this Section.
2. Provide thrust restraint at tees and tapping sleeves as specified in this Section.
3. Provide thrust restraint at couplings and adapters as specified in this Section

B. Restraint for Pipe and Fittings

1. Provide restrained joints at changes in direction of pipe lines.
2. Restrain pipe joints in all directions from change of direction. Restrain joints within distance of change of direction shown in Thrust Restraint for Buried Pipe Table 1 through Table 4 at end of this Section. Restraint distance shown in this Section is minimum distance required to restrain pipe for trench construction and soil used as the basis of the tables. Determine restraint distance required for actual trench construction and soil. Increase restraint distance if distance required to restrain pipe and fittings installed is greater than distance shown. Provide additional restrained distance at no additional cost to the Owner.
3. Where piping enters structures within distances specified in tables above, provide restrained joint wall pipe at structure. Terminate restraint at restrained joint wall pipe.

C. Restraint for Valves, Couplings, Adapters, and Other Piping Appurtenances

1. General
   a. Restrain valves, couplings, adapters, and other piping appurtenances located near changes in direction and within distances specified in Thrust Restraint for Buried Pipe Table 1 through Table 4 at end of this Section.
   b. Restrain valves so that unbalanced force developed during opening and closing of valves are supported independent of the piping system.
2. Sleeve Type Couplings and Flange Adapters
   a. Restrain sleeve type couplings with harness of tie rods that span across coupling between restrained pipe or fitting joints.
   b. Tie rods and nuts shall be AISI Type 316 stainless steel.

D. Pipe Anchors: Pipe anchors will not be accepted in lieu of restrained joints.

E. Restraint at Tapped Connections to Existing Pipe and at Tees Cut Into Existing Pipe

1. Use concrete thrust blocks at tapped connections to existing piping and at tees cut into existing piping.

2. Thrust blocks at tapped connections to existing piping and at tees cut into existing piping shall be as shown on the Drawings.

3.12 FLUSHING AND CLEANING INTERIOR OF PIPING

A. Flush and clean piping as specified in Section 33 36 13.05 Piping Flushing and Cleaning.

3.13 HYDROSTATIC TEST

A. Test piping as specified in Section 33 36 13.06 Piping Testing.

3.14 PIPING COLOR CODING, IDENTIFICATION TAPE, LOCATING WIRE

A. Color code pipe as specified in the appropriate Section 33 36 23.24 AWWA C900 and C905 PVC Pipe and Fittings.

B. Provide pipe identification marking as specified in the appropriate Section 33 36 23.24 AWWA C900 and C905 PVC Pipe and Fittings.

C. Provide valve identification as specified in Section 33 36 33.33 Utility Valve Boxes.

D. Provide identification tape for all buried piping, as well as ARV supply piping, per City of North Port Utilities requirements. Locating tape shall be installed 1 foot below final grade over the centerline of the pipe. The tape shall be the detectable type and shall be laid continuously without gaps between ends over all installed piping. The tape shall have the words “Caution: Water Line or Sewer Line Buried Below” painted continuously along its length.

E. Provide locating wire for all buried piping, as well as ARV supply piping, per City of North Port Utilities requirements. Locating wire shall be installed directly on top of the pipe and not more than 6” above the top of the pipe continuously without gaps between ends over the entire length of the piping and fittings with access to the wire through valve boxes.

3.15 MANUFACTURER'S REPRESENTATIVE

A. Provide assistance of manufacturers' representatives as follows:

1. Check piping installation to verify installation procedures comply with manufacturer's recommendations.

2. Advise Contractor on proper installation of piping, joints, supports, and special connections.

B. Provide services of manufacturers' representative at no additional cost to Owner.

END OF SECTION 33 11 13.04

THIS PAGE INSERTED SO THAT FIRST PAGE OF THE FOLLOWING SECTION STARTS ON THE FRONT FACE OF A PAGE PRINTED ON BOTH SIDES

SECTION 33 36 13.05

PIPING FLUSHING AND CLEANING

PART 1 – GENERAL

1.01 SUMMARY

A. Section Includes: Requirements for flushing and cleaning utility piping.

B. Payment Procedures

1. Flushing Water

a. Contractor shall pay Utility providing water for flushing of utility piping systems.

b. Payment for water shall be at rate established by Utility.

c. Provide flushing water at no additional cost to Owner.

2. Flushing Operations: Contractor shall provide materials, equipment, labor, and services required to clean and flush water main pipeline, furnished and installed as a part of Work, as specified in this Section at no additional cost to the Owner.

1.02 SUBMITTALS

A. General: As specified in:

1. Section 01 33 00 Submittal Procedures; and

2. This Section

B. Submit copy of permit for flushing water disposal prior to starting piping system installation.

C. Submit calibration record for flushing and cleaning water supply meter.

1.03 PROJECT/SITE CONDITIONS

A. Regulatory Requirements for Disposal of Flushing Water

1. Obtain permit from appropriate Florida Water Management District prior to starting piping system installation. Make application and arrangements and pay fees and charges for disposal of discharge from flushing.

2. Submit copy of permit for flushing water disposal.

3. Comply with requirements of permit for flushing water disposal. Meet regulatory requirements relative to disposal of discharge water from flushing.

PART 2 – PRODUCTS

2.01 FLUSHING AND CLEANING EQUIPMENT AND PIPING

A. Contractor shall be responsible for the sizing and selection of flushing and cleaning systems, equipment, piping, and appurtenances.

PART 3 – EXECUTION

3.01 PIPING FLUSHING AND CLEANING

A. General

1. Flush and clean piping systems, 8-inch and smaller.
2. Pig or swab interior of piping systems, 10-inch and larger. Cleaning of 10-inch water main pipeline may be performed by flushing and cleaning (instead of pigging), if approved by the Engineer.

B. Preparation for Flushing and Cleaning

1. Furnish and install taps, connections, pipe, fittings, valves, pumps, and tanks required to flush and clean piping. Taps, connections, pipe, fittings, valves, pumps, and tanks shall be of proper size to provide flushing velocity specified in this Section.
2. Furnish and install connections, pipe, fittings, and valves for launching and catching pig, for piping cleaned by pigging.
3. Provide backflow preventer in flushing water connection to potable water system. Backflow preventer shall be approved by regulatory authority having jurisdiction.
4. Furnish and install meter to record volume of water used for flushing and cleaning. Use meter approved by the Engineer. Meter shall have been calibrated by independent laboratory, or other facility acceptable to the Engineer, with one year of installation date for flushing and cleaning. Submit calibration record for meter.

C. Flushing and Cleaning Interior of Piping

1. General

a. Flush, clean, or flush and clean interior of piping, unless otherwise approved by the Engineer as provided in this Section.

1) If piping systems are kept free of dirt, debris, small tools, and other objects during installation, and cleanliness of piping can be verified by the Engineer by direct observation, television inspection, or other means approved by the Engineer, the requirement for cleaning by flushing, pigging, or swabbing may be waived by the Engineer.

2) Piping systems that are partially or fully submerged at anytime during installation shall be cleaned by flushing, pigging, or swabbing, as specified in this Section.

b. Coordinate flushing time and duration with Owner. Coordinate flushing duration and time for each piping section prior to flushing.

c. Flushing water supply shall meet the following requirements:

1) Flushing water for piping shall be reclaimed water or potable water.

2) Flushing water supply capacity shall be sufficient to provide a sustained velocity of 4 feet per second in the piping to be flushed;

3) Flushing shall not reduce water supply system pressure below 20 psi; and

4) Flushing shall not adversely impact any customer connected to flushing water supply system.

d. Flush piping until discharged flushing water is clear. Flushing volume shall not be less than the one total volume of piping being flushed. If discharged flushing water is not clear after being flushed with one total volume of piping being flushed, continue flushing until discharged flushing water is clear.

2. Flushing and Cleaning Interior of Piping, 8-inch and Smaller

a. Minimum Flushing Velocity for 8-inch and Smaller Piping: 4 feet per second.

b. Minimum Flow Rate for Flushing 8-inch and Smaller Piping

1) Minimum Flow Rates for Flushing Piping are as follows:

Pipe Size	Minimum Flow Rate
1/4-inch	1 gpm
1/2-inch	3 gpm
3/4-inch	6 gpm
1-inch	9 gpm
1¼-inch	16 gpm
1½-inch	22 gpm
2-inch	37 gpm
2½-inch	53 gpm
3-inch	83 gpm
4-inch	180 gpm
6-inch	400 gpm
8-inch	720 gpm
10-inch	1,100 gpm
12-inch	1,600 gpm
14-inch	2,200 gpm
16-inch	2,800 gpm

2) The Owner does not guarantee that the specified minimum flushing rates can be obtained from existing reclaimed water or potable water piping

systems. If Contractor elects to clean new piping by flushing, Contractor shall provide pumps, tanks, and piping required to produce specified flushing velocity at no additional cost to the Owner.

3. Flushing and Cleaning Interior of Piping Systems, 10-inch and Larger

   a. Pig or swab interior of piping, 10-inch and larger, unless otherwise approved by Engineer and Owner, or Engineer, Owner, and utility providing flushing water, as appropriate.

   b. Flushing of piping systems, 10-inch and larger, will only be considered if flushing water supply meets requirements specified in this Section and disposal or flushing water meets requirements specified in this Section.

D. Disposal of Flushing Water

1. Discharge water from flushing to storm drain systems in accordance with permit for disposal of flushing water and as specified in this Section. Provide silting basins and other discharge treatment systems in accordance with permit for flushing water disposal and to meet discharge permit requirements.

2. Do not allow discharge from flushing to puddle or pond on construction site except in areas designated and approved to receive flushing water.

3. Do not allow discharge from flushing to flow off construction site except through permitted discharge structures and through pipes, conduits, and channels that have been designated and approved for discharge flow from flushing.

4. Do not use sanitary sewers for disposal of flushing water.

5. Do not discharge flushing water containing settleable solids into storm sewers.

6. Do not contaminate or disturb the environment of properties adjacent to the Work.

7. Do not contaminate streams, canals, or other surface waters.

8. Provide temporary facilities and controls for flushing water discharge. Temporary facilities and controls shall be appropriate to the project, including, but not limited to:

   a. Silting basin, or basins, of adequate size.

   b. Filters.

   c. Coagulants.

   d. Screens.

9. Discharge onto pavement shall not damage pavement.

3.02 CONNECTION OF NEW PIPING SYSTEM TO EXISTING PIPING SYSTEM

A. Do not complete connection of new piping system to existing piping system until Engineer has approved connection of new piping system to existing piping system.

B. Do not complete connection of new piping system to existing piping system until flushing, cleaning, and utility testing of new piping system have been completed.

3.03 REMOVAL OF TEMPORARY FLUSHING AND CLEANING SYSTEMS

A. Remove temporary pipe, fittings, valves, pumps, and tanks installed for flushing and cleaning. Furnish and install caps on plain ends of pipe, plugs in joints bells, and blind flanges on flanges after temporary piping is removed.

B. If shut-down of Owner's piping system, or systems, is required to remove temporary piping, shut-down shall only be done by Owner. Notify Owner of requested shut-down not less than 48 hours in advance of requested shut-down. Coordinate removal of temporary piping with Owner's shut-down schedule.

END OF SECTION 33 36 13.05

THIS PAGE INSERTED SO THAT FIRST PAGE OF THE FOLLOWING SECTION STARTS ON THE FRONT FACE OF A PAGE PRINTED ON BOTH SIDES

SECTION 33 36 13.06

PIPING TESTING

PART 1 – GENERAL

1.01 SUMMARY

A. Section Includes: Requirements for testing piping.

1.02 REFERENCES

A. General: References to standards, specifications, manuals, or codes of any technical society, organization or association, or to the Laws or Regulations of any government authority, whether such reference be specific or by implication, shall mean the latest standard, specification, manual, code, or Laws or Regulations in effect at the time of opening of Bids (or, on the Effective Date of the Agreement if there were no Bids), except as may be otherwise specifically stated in the Contract Documents.

B. ANSI/AWWA Standards

1. ANSI/AWWA C605 — Underground Installation of Polyvinyl Chloride (PVC) Process Pipe and Fittings for Water

1.03 SUBMITTALS

A. General: As specified in:

1. Section 01 33 00 Submittal Procedures;
2. Section 01 33 23 Shop Drawings, Product Data, and Samples; and
3. This Section

B. Submit pressure recording charts for hydrostatic test to Engineer not more than 3 days following pressure test.

PART 2 – PRODUCTS

2.01 TEST EQUIPMENT, PIPING, WATER STORAGE VESSELS, AND APPURTENANCES

A. Contractor shall be responsible for the selection of pressure test equipment, piping, water storage vessels, compressors, gas cylinders, and appurtenances.

PART 3 – EXECUTION

3.01 PIPE INSPECTION

A. Inspect new piping prior to pressure test.

B. Verify all bolts, studs, and nuts are installed in joints.

C. Verify nuts are properly tightened on bolts and studs.

D. Verify gaskets are installed. Verify gaskets are properly installed.

E. Verify joint restraint is installed as shown and specified.

F. Verify piping supports are installed as shown and specified.

G. Verify concrete used for joint restraint and supports has achieved design strength.

3.02 PRESSURE TEST - GENERAL

A. Test piping systems furnished and installed as a part of Work.

B. Pressure test completed section of new piping systems as specified in this Section. During pressure test, perform visual examination of new piping systems as specified in this Section. Perform pressure test after flushing and cleaning have been successfully completed.

C. Test completed piping sections of piping installed in existing piping systems as follows:

1. If new piping sections can be isolated from existing utility piping, pressure test new piping section as specified in this Section and perform visual examination of new piping during pressure test as specified in this Section.

2. If new piping sections cannot be isolated from existing utility piping that is not to be modified as part of the project, perform visual examination of new piping under system pressure as specified in this Section.

D. Pressure test procedures for piping shall meet the requirements of the ANSI/AWWA Standard C605,

E. Pressure test piping systems with potable water or reclaimed water.

3.03 PREPARATION FOR PRESSURE TEST

A. Furnish and install taps and connections required to perform pressure test.

1. If lower end of piping section to be tested is closed, provide tap at lower end of piping.

2. Provide taps of adequate size to fill and pressurize piping section to be tested.

3. Tap piping at high points, in piping section to be tested, if necessary to release air from piping.

B. For pipe section with open end, or ends, install test plugs in open ends of piping section to be tested or test caps on open ends of piping section to be tested.

1. Install test plugs so that test plugs do not blow out of line being tested.

2. Install test caps so that test caps do not blow off of line being tested.

3. Provide tap in each test plug and test cap.

C. Provide taps of adequate size to fill and pressurize piping section to be tested.

D. Taps, test plugs, and test caps shall be capable of holding 1.5 times the test pressure applied to the piping section to be tested.

3.04 FILLING LINE TO BE TESTED

A. Place test water into line at lower end of line.

B. Provide orifice at top of pipe in plug or cap at upper end of line.

C. Provide orifice of adequate size to remove air from line.

D. Expel air from piping prior to application of test pressure.

3.05 NOTIFICATION

A. Notify Engineer and the North Port Utilities Utility Coordinator at least 48 hours in advance of start of pressure test.

B. If the Engineer states that the Engineer will observe pressure test, do not start pressure test unless the Engineer is present. If the presence of the Engineer is required and testing is not observed by the Engineer, testing shall be repeated with the Engineer present at no additional cost to the Owner.

C. If the Owner states that the Owner will observe pressure test, do not start pressure test unless the Owner is present. If the presence of the Owner is required and testing is not observed by the Owner, testing shall be repeated with the Owner present at no additional cost to the Owner.

3.06 HYDROSTATIC/PRESSURE TEST

A. Test Pressure:..... 150 psi.

B. Pressure Test Period: ..... Not less than two consecutive hours.

C. Pressure Recording

1. Record test pressure and location of test.
2. Use recording pressure gauge.
3. Submit recording charts to Engineer.

D. Stainless Steel Piping

1. Apply test pressure to piping and turn test pumps off.
2. Allow piping to stand without make-up pressure for entire test period.
3. Test will be considered successful when pressure drop over test period is 5 psi or less.
4. If pressure drop exceeds 5 psi, repair leaks and repeat test.
5. Repair leaks and repeat test until pressure drop over test period is 5 psi or less.

E. AWWA C900 and C905 PVC Piping

1. Perform test in accordance with ANSI/AWWA C605.
2. Test will be considered successful when pressure drop over test period is 5 psi or less.
3. If pressure drop exceeds 5 psi, repair leaks and repeat test.
4. Repair leaks and repeat test until pressure drop over test period is 5 psi or less.

F. ASTM D1785 Schedule 80 PVC Piping and ASTM F441 CPVC Piping

1. Apply test pressure to piping and turn test pumps off.
2. Allow piping to stand without make-up pressure for entire test period.
3. Test will be considered successful when pressure drop over test period is 5 psi or less.
4. If pressure drop exceeds 5 psi, repair leaks and repeat test.
5. Repair leaks and repeat test until pressure drop over test period is 5 psi or less.

G. HDPE Piping

1. Apply initial test pressure and turn test pumps off.
2. Allow piping to stand without make-up pressure for two to three hours, to provide for diametric expansion or pipe stretching to stabilize piping.
3. Follow equilibrium period, apply specified test pressure and turn test pumps off.
4. Allow piping to stand without make-up pressure for entire test period.
5. Test will be considered successful when make-up water quantity, after specified test period, is equal to or less than the following:

Pipe Size	Make-up Water Allowance (Gallons per 100 feet of Pipe)
4-inch	0.25
6-inch	0.60
8-inch	1.0
10-inch	1.3
12-inch	2.3
14-inch	2.8
16-inch	3.3
18-inch	4.3
20-inch	5.5
24-inch	8.9
30-inch	12.7
36-inch	18.0
42-inch	23.1

6. Repair leaks and repeat test until make-up water quantity is equal to or less than that specified above.

H. Fiberglass Piping

1. Static Pressure Test: Perform static pressure test on completed piping systems, including fiberglass pipe and fittings as follows:

a. Apply test pressure to piping and turn test pumps off.

b. Allow piping to stand without make-up pressure for entire test period.

c. Static pressure test will be considered successful when pressure drop over test period is 5 psi or less.

d. If pressure drop exceeds 5 psi, repair leaks and repeat test.

e. Repair leaks and repeat test until pressure drop over test period is 5 psi or less.

2. Cyclic Hydrostatic Pressure Test

a. Following static pressure test, perform cyclic hydrostatic pressure test on completed fiberglass pipe and fittings.

b. Subject fiberglass piping system to 10 pressurization cycles from 0 psig to 1.5 times the design working pressure.

c. After the 10 cycles, the pressure shall be held on the system for a minimum of one hour and the system inspected for leaks.

d. Cyclic hydrostatic pressure test will be considered successful when there are no leaks.

e. If leak, or leaks, are found, repair leaks and repeat test.

f. Repair leaks and repeat test until there are no leaks.

J. Visual Examination during Pressure Test

1. Visually examine exposed pipes, fittings, valves, hydrants, and joints during pressure test.

2. Visually examine ground surface and filled trenches along route of piping for visible leakage and indications of leakage.

3.09 VISUAL EXAMINATION UNDER SYSTEM PRESSURE

A. For sections of new buried piping that cannot be isolated from existing utility piping not to be modified as part of the project, perform visual examination of new buried piping as follows:

1. Leave buried joints visible until piping is subjected to system pressure.

2. Visually examine pipe and fitting joints for visible leakage.

B. For sections of new exposed piping that cannot be isolated from existing utility piping not to be modified as part of the project, perform visual examination of new exposed piping as follows:

1. Visually examine exposed pipes, fittings, valves, and joints while piping is subjected to system pressure.

2. Feel underside of joints.

3.10 TAPPING SLEEVE AND VALVE PRESSURE TEST

A. Hydrostatically test tapping valve and tapping sleeve assembly prior to tapping existing pipe.

B. Test pressure shall not be less than test pressure for piping system connecting to tap specified in this Section.

C. Pressure test period shall not less than two consecutive hours.

D. Allow piping to stand without make-up pressure for entire test period.

E. Test will be considered successful when pressure drop over test period is 5 psi or less.

F. If pressure drop exceeds 5 psi, repair leaks and repeat test.

G. Repair leaks and repeat test until pressure drop over test period is 5 psi or less.

3.11 SYSTEM REPAIR

A. Repair visible leaks.

B. If piping system fails pressure test, locate and repair leaks. Replace defective pipe, fittings, valves, and other products at no additional cost to the Owner.

C. Repeat utility piping testing and piping system repair until piping system meets the requirements of this Section.

3.12 TEST CLEAN-UP

A. Remove testing equipment, piping, water storage vessels, and appurtenances.

B. Remove test plugs and test caps after test is successfully completed.

C. Plug taps in piping watertight after test is successfully completed.

END OF SECTION 33 36 13.06

SECTION 33 36 23.24

AWWA C900 AND C905 PVC PIPE AND FITTINGS

PART 1 – GENERAL

1.01 SUMMARY

A. Section Includes: Requirements for AWWA C900 and C905 PVC pipe, fittings, and accessories.

1.02 REFERENCES

A. General: References to standards, specifications, manuals, or codes of any technical society, organization or association, or to the Laws or Regulations of any government authority, whether such reference be specific or by implication, shall mean the latest standard, specification, manual, code, or Laws or Regulations in effect at the time of opening of Bids (or, on the Effective Date of the Agreement if there were no Bids), except as may be otherwise specifically stated in the Contract Documents.

B. ANSI/AWWA Standards

1. ANSI/AWWA C110/A21.10 — Ductile-Iron and Gray-Iron Fittings 3-in. Through 48-in. for Water and Other Liquids
2. ANSI/AWWA C111/A21.11 — Rubber-Gasket Joints for Ductile-Iron and Gray-Iron Pressure Pipe and Fittings
3. ANSI/AWWA C153/A21.53 — Ductile Iron Compact Fittings, 3 In. Through 24 In. (76 mm Through 610 mm) and 54 In. Through 64 In. (1,400 mm Through 1,600 mm), for Water Service
4. ANSI/AWWA C605 — Underground Installation of Polyvinyl Chloride (PVC) Pressure Pipe and Fittings for Water
5. ANSI/AWWA C900 — Polyvinyl Chloride (PVC) Pressure Pipe 4 In. Through 12 In. for Water Distribution
6. ANSI/AWWA C905 — Polyvinyl Chloride (PVC) Pressure and Fabricated Fittings, 14 In. Through 48 In. (350 mm Through 1,200 mm), for Water Transmission and Distribution
7. ANSI/AWWA C907 — Polyvinyl Chloride (PVC) Pressure Fittings for Water – 4 In. Through 8 In. (100 mm Through 200 mm)

C. ASTM Standards

1. ASTM D1784 — Specification for Rigid Poly(Vinyl Chloride) (PVC) Compounds and Chlorinated Poly(Vinyl Chloride) (CPVC) Compounds
2. ASTM D3139 — Specification for Joints for Plastic Pressure Pipes Using Flexible Elastomeric Seals
3. ASTM F477 — Specification for Elastomeric Seals (Gaskets) for Joining Plastic Pipe

1.03 DEFINITIONS

A. Buried Pipe and Fittings: Pipe and fittings installed in trenches and covered with soil. Pipe and fittings beneath structures and encased in concrete.

B. Pipe, fittings, and valve sizes and references to pipe diameter on the Drawings and in the Specifications are intended to be nominal size or diameter, and shall be interpreted as nominal size or diameter.

1.04 SUBMITTALS

A. General: As specified in:

1. Section 01 33 00 Submittal Procedures;

2. Section 01 33 23 Shop Drawings, Product Data, and Samples; and

3. This Section

B. Submit product data for AWWA C900 PVC pipe, AWWA C905 PVC pipe, fittings for AWWA C900 PVC pipe, and fittings for AWWA C905 PVC pipe including the following:

1. Product manufacturer's specifications;

2. Pipe materials of construction;

3. Fitting materials of construction;

4. Additional information required to evaluate proposed product's compliance with the Contract Documents.

C. Submit Affidavits of Compliance for AWWA C900 PVC pipe, AWWA C905 PVC pipe, PVC fittings for AWWA C900 PVC pipe, and PVC fittings for AWWA C905 PVC pipe as follows:

1. Submit Affidavit that all AWWA C900 PVC pipe furnished for this project comply with the requirements of ANSI/AWWA C900.

2. Submit Affidavit that all AWWA C905 PVC pipe furnished for this project comply with the requirements of ANSI/AWWA C905.

3. Submit Affidavit that all fabricated PVC fitting for AWWA C900 PVC pipe furnished for this project comply with the requirements of ANSI/AWWA C900.

4. Submit Affidavit that all fabricated PVC fitting for AWWA C905 PVC pipe furnished for this project comply with the requirements of ANSI/AWWA C905.

5. Submit Affidavit that all molded PVC fitting for 4-inch through 8-inch AWWA C900 PVC pipe furnished for this project comply with the requirements of ANSI/AWWA C907.

1.05 QUALITY ASSURANCE

A. Marking

1. Mark pipe and fittings.

2. Markings shall meet the requirements of applicable Standards.

B. Factory Tests

1. Test materials used in manufacture of AWWA C900 pipe and fittings, AWWA C905 pipe and fittings, and AWWA C907 fittings.

2. Tests shall meet the requirements of applicable Specifications and Standards.

C. Field Testing: Field test pipe, fittings, and appurtenances as specified in Section 33 36 13.06 Piping Testing.

1.06 DELIVERY, STORAGE, AND HANDLING

A. General

1. Product Delivery: As specified in Section 01 65 00 Product Delivery Requirements.

2. Product Storage and Handling: As specified in Section 01 66 00 Product Storage and Handling.

B. Piping Products

1. Deliver pipe, fittings, and accessories in a clean and undamaged condition. Store pipe, fittings, and accessories off the ground.

2. Keep interior of pipe, fittings, and accessories free from dirt and foreign matter.

3. Store plastic pipe and fittings, gaskets, and other products which will be deteriorated by sunlight in a cool location out of direct sunlight.

4. Gaskets shall not come in contact with petroleum products.

PART 2 – PRODUCTS

2.01 AWWA C900 PIPE

A. Material and Pipe Standard for AWWA C900 PVC Pipe:.....ANSI/AWWA C900.

B. Pressure Rating and Dimension Ratio for AWWA C900 PVC Pipe:

1. Buried AWWA C900 PVC Pipe Beneath Roadways, Parking Lots, and Parking Lot Entrances

a. Pressure Rating:..... 200 psi.

b. Dimension Ratio: .....DR 14.

2. Buried AWWA C900 PVC Pipe in Other Locations, Unless Otherwise Shown on the Drawings

a. Pressure Rating:..... 150 psi.

b. Dimension ratio: .....DR 18.

C. Approved Manufacturers:

1. Certainteed / North American Pipe Company

2. J-M Manufacturing

3. Diamond

4. National Pipe & Plastics

2.02 AWWA C905 PVC PIPE

A. Material and Pipe Standard for AWWA C905 PVC Pipe:.....ANSI/AWWA C905.

B. Pressure Rating and Dimension Ratio for AWWA C905 PVC Pipe:

1. Buried AWWA C905 PVC Pipe Beneath Roadways, Parking Lots, and Parking Lot Entrances
    a. Pressure Rating:..... 305 psi.
    b. Dimension Ratio: .....DR 14.
2. Buried AWWA C905 PVC Pipe in Other Locations, Unless Otherwise Shown on the Drawings
    a. Pressure Rating:..... 235 psi.
    b. Dimension ratio: .....DR 18.

C. Approved Manufactuers:
1. Certainteed / North American Pipe Company
2. J-M Manufacturing
3. Diamond
4. National Pipe & Plastics

2.03 PIPE COLOR

A. Potable Water Mains:…….……Blue
B. Wastewater Force Mains:……..Green
C. Reclaimed Water Mains:……Magenta

2.04 FITTINGS FOR AWWA C900 AND AWWA C905 PVC PIPE

A. Fitting Material: .....Ductile iron, or PVC.
B. Push-on Joint and Mechanical Joint Ductile Iron Fittings for AWWA C900 and AWWA C905 PVC Pipe
1. Material: ..... Ductile iron.
2. Material and Fitting Standards for Push-on Joint and Mechanical Joint Ductile Iron Fittings for AWWA C900 and AWWA C905 PVC Pipe
    a. 4-inch through 24-inch Ductile Iron Fittings:..... ANSI/AWWA C110/A21.10; or ANSI/AWWA C153/A21.53.
    b. 30-inch through 48-inch Ductile Iron Fittings:.....ANSI/AWWA C110/A21.10.
3. Ductile Iron Fitting Pressure Rating: ..... 350 psi.
4. Ductile Iron Pipe Lining: .....Protecto 401 Ceramic Epoxy

C. Ceramic Epoxy Lining for Ductile Iron Fittings
1. Condition of Ductile Iron Fittings Prior to Surface Preparation for Lining
    a. Ductile fittings to receive Protecto 401 Ceramic Epoxy Lining shall be delivered to the application facility without asphalt, cement lining, or any other lining on the interior surface.
    b. Because removal of old linings may not be possible, the entire interior of the ductile iron fittings shall not have been lined with any substance prior to the application of the specified lining material, and no coating shall have been applied to the first six inches of the exterior of the spigot ends.

2. Ceramic Epoxy Lining Material

   a. General: Ceramic epoxy lining material for ductile iron fittings shall be Protecto 401 Ceramic Epoxy, or equal. The material shall be an amine cured novalac epoxy containing at least 25% by volume of ceramic quartz pigment. Any request for substitution shall be accompanied by the following:

      1) Successful history of lining fittings for potable water service;

      2) Test report verifying the following properties; and

      3) Certification of test results.

   b. Lining Material Permeability

      1) Permeability Rating: 0.00

      2) Permeability Test Standard: Method A of ASTM E96-66, Procedure A with a test duration of 30 days.

   c. Coupon Test: The following tests shall be run on coupons from factory lined ductile iron fitting:

      1) ASTM B117 Salt Spray (scribed panel) with results to equal 0.0 undercutting after two years.

      2) ASTM G095 Cathodic Disbondment 1.5 volts @ 77ºF with results to equal no more than 0.5mm undercutting after 30 days.

      3) Immersion Testing rated using ASTM D714-87

         a) 20% Sulfuric Acid with no effect after two years.

         b) 25% Sodium Hydroxide with no effect after two years.

         c) 160ºF Distilled Water with no effect after two years.

         d) 120ºF Tap Water (scribed panel) with 0.0 undercutting after two years with no effect.

   d. Abrasion Resistance

      1) Maximum Allowable Loss: Not to exceed 4 mils. (0.10mm) loss after one million cycles.

      2) Abrasion Resistance Test Standard: European Standard EN 598: 1994 section 7.8 Abrasion resistance.

3. Ceramic Epoxy Lining Application

   a. Applicator: Ceramic epoxy lining shall be applied by a competent firm with a successful history of applying linings to the interior of ductile iron fittings.

   b. Surface Preparation

      1) Prior to abrasive blasting, the entire area to receive the protective compound shall be inspected for oil, grease, and other substances which may affect lining quality. Solvent clean areas where oil, grease, or any substance which can be removed by solvent, is present. Solvent cleaning shall meet the requirements of the guidelines outlined in DIPRA-1 Solvent Cleaning.

2) After the surface has been made free of grease, oil or other substances, areas to receive the protective compounds shall be abrasive blasted using compressed air nozzles with sand or grit abrasive media. The entire surface to be lined shall be struck with the blast media so that all rust, loose oxides, and scale are removed from the surface. Only slight stains and tightly adhering annealing oxide may be left on the surface.

3) Any area where rust reappears before lining shall be reblasted.

c. Lining

1) After the surface preparation, and within 8 hours of surface preparation, the interior of the fitting shall receive 40 mils nominal dry film thickness of Protecto 401, or equal, lining.

2) No lining shall take place when the substrate or ambient temperature is below 40 degrees Fahrenheit. The surface shall be dry and dust free.

3) Do not apply lining to face of flanges.

d. Number of Coats

1) The number of coats of lining material applied shall be as recommended by the lining manufacturer. However, in no case shall this material be applied above the dry thickness per coat recommended by the lining manufacturer in printed literature.

2) The maximum or minimum time between coats shall be that time recommended by the lining material manufacturer.

3) No material shall be used for lining which is not indefinitely recoatable with itself without roughening of the surface.

e. Touch-Up & Repair: Protecto Joint Compound, or equal material supplied by the lining material manufacturer, shall be used for touch-up or repair in accordance with manufacturer's recommendations.

4. Ductile Iron Fitting Lining Inspection and Certification

a. Inspection

1) All ductile iron fitting ceramic epoxy linings shall be checked for thickness using a magnetic film thickness gauge. Thickness testing shall be done using the method outlined in SSPC-PA-2 Film Thickness Rating.

2) The interior lining of fittings shall be tested for pinholes with a non-destructive 2,500 volt test. Any defects found shall be repaired prior to shipment.

3) Each fitting shall be marked with the date of application of the ceramic epoxy lining system along with its numerical sequence of application on that date and records maintained by the applicator of his work.

b. Certification: The fitting manufacturer must supply a certificate attesting to the fact that the applicator met the requirements of this Section, and that the material used was as specified.

C. Push-on Joint PVC Fittings for AWWA C900 and AWWA C905 PVC Pipe

1. Material Standard for PVC Fittings: ..... ASTM D1784.

2. Fabricated Push-on Joint PVC Fittings for AWWA C900 Pipe and AWWA C905 PVC Pipe

   a. Standard for Fabricated Push-on Joint PVC Fittings for AWWA C900 Pipe and AWWA C905 PVC Pipe

      1) Standard for Fabricated PVC Fittings.....ANSI/AWWA C900.
         for AWWA C900 Pipe:

      2) Standard for Fabricated PVC Fittings.....ANSI/AWWA C905.
         for AWWA C905 Pipe:

   b. Pressure Rating for Fabricated Push-on Joint PVC Fittings for AWWA C900 Pipe and AWWA C905 PVC Pipe: Not less than pressure rating of pipe connecting to fittings.

3. Molded Push-on Joint PVC Fittings for 4-inch through 8-inch AWWA C900 Pipe

   a. Standard for Molded Push-on Joint .....ANSI/AWWA C907.
      PVC Fittings for 4-inch through 8-inch
      AWWA C900 Pipe:

   b. Pressure Rating for Molded Push-on Joint ..... 150 psi.
      PVC Fittings for 4-inch through 8-inch
      AWWA C900 Pipe:

2.05 JOINTS FOR AWWA C900 AND AWWA C905 PVC PIPING

A. Joint Type

1. Restrained Joints for AWWA C900 and AWWA C905 PVC Pipe and Fittings

   a. PVC Pipe to PVC Pipe Joints: ..... Restrained push-on joint, or push-on joint with restraining device.

   b. PVC Pipe to Fitting Joints:..... Restrained mechanical joint, mechanical joint with restraining device, or push-on joint with restraining device.

   c. PVC Pipe to Valve Joints:..... Restrained mechanical joint, or mechanical joint with restraining device.

   d. PVC Pipe to Ductile Iron Pipe: Ductile iron sleeve with joints as follows:

      1) Sleeve Joint for PVC Pipe:..... Restrained mechanical joint, or mechanical joint with restraining device.

      2) Sleeve Joint for Ductile Iron Pipe:..... Restrained mechanical joint.

   e. PVC Pipe to 3-inch and Smaller Pipe: Threaded joint.

2. Non-restrained Joints for AWWA C900 and AWWA C905 PVC Pipe and Fittings

   a. PVC Pipe to PVC Pipe Joints: .....Push-on joint.

   b. PVC Pipe to Fitting Joints:.....Mechanical joint or push-on joint.

   c. PVC Pipe to Valve Joints:..... Mechanical joint.

   d. PVC Pipe to Ductile Iron Pipe:.....Ductile iron sleeve with mechanical joints.

B. Push-on Joints for AWWA C900 and AWWA C905 PVC Pipe

1. Push-on Joint Standard for AWWA C900 PVC Pipe:.....ANSI/AWWA C900.
2. Push-on Joint Standard for AWWA C905 PVC Pipe:.....ANSI/AWWA C905.
3. Push-on Joint Standard for PVC Fittings: ..... ASTM D3139.

C. Restraining Joints and Restraining Devices for AWWA C900 PVC Pipe, AWWA C905 PVC Pipe, and AWWA C907 Fittings

1. Approved Manufacturers - Bell Restraints
   a. Ford Uniflange;
   b. EBAA Iron, Inc., 1500 Series;
   c. SIGMA;
   d. SIP Industries – EZ Grip PTP Series.

D. Approved Manufacturers - Mechanical Joint Restraints

1. EBAA Iron, Inc., Series 2000PV Mechanical Joint Restraint Gland;
2. SIGMA Series 3000 / 4000;
3. Stargrip;
4. SIP Industries EZ Grips

2.06 JOINT ACCESSORIES FOR MECHANICAL JOINTS

A. Mechanical Joint Gaskets

1. Standard for Ductile Iron and Cast Iron .....ANSI/AWWA C111/A21.11.
   Mechanical Joint, Push-on Joint, and
   Restrained Joint Gaskets:
2. Standard for PVC Push-on Joint Fitting Gaskets: .....ASTM F477.

B. Bolts and Nuts for Mechanical Joints

1. Bolts for Mechanical Joints
   a. Type: .....Tee-head.
   b. Material: .....Cast iron.
   c. Standard:.....ANSI/AWWA C111/A21.11.
2. Nuts for Mechanical Joints
   a. Type: .....Hexagon.
   b. Material: .....Cast iron.
   c. Standard:.....ANSI/AWWA C111.A21.11.

PART 3 – EXECUTION

3.01 INSTALLATION, GENERAL

A. Install AWWA C900 and AWWA C905 pipe, fittings, and appurtenances as specified in this Section and in Section 33 36 13.04 Piping Installation - General.

B. Installation of AWWA C900 and AWWA C905 pipe and fittings shall meet the requirements of ANSI/AWWA C605.

3.02 CUTTING AWWA C900 AND C905 PVC PIPE

A. Field cuts may be made for shorter than standard pipe lengths.

B. Field cut pipe with either hand or mechanical saws or mechanical cutters. Use proper tool, machine, or tool and machine for AWWA C900 and AWWA C905 pipe.

C. Do not cut pipe by burning.

D. Pipe ends shall be saw cut square and perpendicular to pipe axis.

E. Examine cut ends for damage caused by cutting.

F. Finish cut ends of pipe. Finish plain end pipe for mechanical joints and push-on joints as follows:

1. Bevel outside of the cut ends of pipe about one-quarter inch (1/4-inch) at an angle of about thirty degrees (30°).

2. Remove sharp and rough edges, which might injure gasket.

3.03 JOINT ASSEMBLY METHODS FOR PUSH-ON JOINTS AND MECHANICAL JOINTS

A. Use methods and procedures to assemble pipe, fitting, and valve joints that provide completed joints that meet the requirements of the Specifications without damage to pipe, fittings, valves, and appurtenances.

1. Push pipe by means of block and push bar.

2. Do not push pipe if pushing will damage pipe being installed or pipe previously installed.

3. Do not push pipe if joint gaskets are "rolled", cut, or otherwise damaged by pushing.

4. Where pushing will damage pipe or joint, use mechanical means consisting of cable placed inside pipe with winch, jack, or come-along to pull pipe "home".

B. Backhoe Method Of Assembly

1. A backhoe may be used to assemble pipe of intermediate and larger sizes.

2. Guide end of pipe by hand into bell of the previously installed pipe.

3. Backhoe bucket may then be used to push the pipe with a pipe sling only. Direct contact between the backhoe bucket and pipe is not permitted.

4. Do not use backhoe to push fittings and valves.

3.04 MECHANICAL JOINTS

A. Cleaning Ductile Iron Mechanical Joint Bells and Gaskets

1. Wire brush inside of each ductile iron pipe, fitting, and valve bell.
2. Wipe bell clean of dirt, oil, grease, and other foreign matter.
3. Wipe bell dry.

B. Cleaning Spigot Ends

1. Remove dirt, debris, and other deleterious substances from spigot end of PVC pipe.
2. Wipe PVC spigot dry.

C. Cleaning Mechanical Joint Gaskets

1. Wipe each gasket clean of dirt, dust, and other foreign matter.
2. Inspect gasket for cuts and gouges. Inspect gasket for deterioration due to contact with foreign substances. Do not use damaged gaskets.

D. Joining Pipe to Ductile Iron Fittings and Valves with Mechanical Joints

1. Brush spigot and gasket with soapy water.
2. Slip mechanical joint gland on spigot end of pipe with gland extension toward the end of the pipe being installed.
3. Place mechanical joint rubber gasket on spigot end of pipe with thick edge of gasket toward gland.
4. Center spigot end of pipe in bell of previously installed pipe, fitting, or valve.
5. Push or pull pipe fully “home” as specified in this Section. (Note: Depth of mechanical joint bell is less than depth of push-on joint bell. Therefore, insertion mark on spigot end of full length section of push-on joint pipe cannot be installed flush with face of mechanical joint bell.)

E. Joining Ductile Iron Fittings and Valves with Mechanical Joints to PVC Pipe

1. Brush spigot and gasket with soapy water.
2. Slip mechanical joint gland on spigot end of pipe with gland extension toward the end of the installed pipe.
3. Place mechanical joint rubber gasket on spigot end of pipe with thick edge of gasket toward gland.
4. Center bell of fitting or valve over spigot end of previously installed pipe.
5. Push or pull fitting or valve fully “home” as specified in this Section. (Note: Depth of mechanical joint bell is less than depth of push-on joint bell. Therefore, insertion mark on spigot end of full length section of push-on joint pipe cannot be installed flush with face of mechanical joint bell.)

F. Completing Mechanical Joint

1. Push gasket into place within the bell with gasket evenly located around entire joint.
2. Move gland into position against face of gasket.

3. Loosely assemble joint bolts and nuts.
4. Evenly tighten nuts using a torque wrench. Alternately tighten nuts 180° apart. Torque shall be within range as follows:

Joint Size and Type	Bolt Size	Torque Range
4-inch through 24-inch Mechanical Joints	3/4-inch	75 to 90 foot-pounds
30-inch and 36-inch Mechanical Joints	1-inch	100 to 120 foot-pounds
42-inch and 48-inch Mechanical Joints	1¼-inch	120 to 150 foot-pounds

5. Bring pipe, fitting, or valve to correct line and grade.
   a. Deflect pipe or fitting after joining, if deflection is required. Deflection of pipe and fittings with ANSI/AWWA C111/A21.11 mechanical joints shall not exceed the following limits:

Size	Maximum Allowable Deflection
4-inch Pipe and Fittings	31.0 inches in 18 feet (8°18')
6-inch Pipe and Fittings	27.0 inches in 18 feet (7°07')
8-inch through 12-inch Pipe and Fittings	20.0 inches in 18 feet (5°21')
14-inch and 16-inch Pipe and Fittings	13.5 inches in 18 feet (3°35')
18-inch and 20-inch Pipe and Fittings	11.0 inches in 18 feet (3°00')
24-inch and 30-inch Pipe and Fittings	9.0 inches in 18 feet (2°23')
36-inch through 48-inch Pipe and Fittings	8.0 inches in 18 feet (2°00')

   b. Do not deflect valve joints.
6. Secure buried pipe, fitting, or valve with haunching and backfill specified in Section 31 23 43 Pipe Haunching and Backfill.

3.05 PUSH-ON JOINTS

A. Cleaning Push-on Joint Bells
   1. Wash and wipe bell clean of dirt, oil, grease, and other foreign matter.
   2. Wipe bell dry.
B. Cleaning Spigot Ends
   1. Remove dirt, debris, and other deleterious substances from spigot end of PVC pipe.
   2. Wipe PVC spigot dry.
C. Cleaning Push-on Joint Gaskets
   1. Wipe each gasket clean of dirt, dust, and other foreign matter.

2. Inspect gasket for cuts and gouges. Inspect gasket for deterioration due to contact with foreign substances. Do not use damaged gaskets.

D. Joining Pipe and Fittings with Push-on Joints

1. Seat gasket in bell of receiving pipe or fitting.
2. Lubricate spigot end of pipe being installed, using lubricant furnished by pipe manufacturer.
3. Center spigot end of pipe in bell of previously installed length of pipe.
4. Support pipe being installed so that pipe being installed is joined along the centerline of receiving pipe.
5. Push, pull, or push and pull pipe or fitting "home" as specified in this Section.
6. If unusual joining resistance is encountered or if the insertion mark does not reach the flush position do the following:
   a. Pull pipe apart. When pulling pipe apart, secure previously installed pipe so that previously installed piping is not damaged and previously completed joints are not disturbed.
   b. Remove gasket from receiving bell.
   c. Examine spigot end of pipe being installed.
      1) Measure spigot and determine if pipe eccentricity is within allowable tolerances. Remove and replace pipe if pipe eccentricity is not within allowable tolerances.
      2) Check end of pipe for burrs and other defects that would impair proper jointing. Check end bevel. Correct imperfections in end of pipe, or remove and replace pipe.
   d. Install new gasket.
   e. Repeat assembly steps.
7. After joining, check gasket and verify that gasket has not pushed out of gasket seat and that gasket is uniformly compressed around pipe spigot. If gasket is not fully seated, uniformly compressed, or fully seated and uniformly compressed, do the following:
   a. Pull pipe apart. When pulling pipe apart, secure previously installed pipe so that previously installed piping is not damaged and previously completed joints are not disturbed.
   b. Remove gasket.
   c. Install new gasket.
   d. Repeat assembly steps.
8. Bring pipe to correct line and grade.
   a. Deflect pipe after joining, if deflection is required.
   b. Deflection of AWWA C900 Polyvinyl Chloride (PVC) pipe with push-on joints shall not exceed the following limits:

Size	Maximum Allowable Deflection
4-inch through 10-inch Pipe and Fittings	12.5 inches in 18 feet (3°00')
12-inch Pipe and Fittings	10.5 inches in 18 feet (2°30')

c. Deflection of AWWA C905 Polyvinyl Chloride (PVC) pipe with push-on joints shall not exceed the following limits:

Size	Maximum Allowable Deflection
12-inch through 24-inch Pipe and Fittings	6.5 inches in 18 feet (1°30')
30-inch and 36-inch Pipe and Fittings	4.0 inches in 18 feet (1°00')

9. Secure buried pipe, fitting, or valve with haunching and backfill specified in Section 31 23 43 Pipe Haunching and Backfill.

3.06 JOINING AWWA C900 AND AWWA C905 PIPE WITH SLEEVE TYPE COUPLINGS

A. Pipe Preparation for Sleeve Type Couplings

1. PVC Pipe

a. Remove dirt, debris, and other deleterious substances from plain end of PVC pipe, and wipe end of pipe dry.

b. Length of PVC pipe end preparation shall not be less than 12 inches from end of pipe.

c. PVC pipe OD shall not be more than 1/64-inch smaller than the standard outside diameter of PVC pipe.

2. Asbestos-Cement Pipe Spigot for Asbestos-Cement to PVC Transition Couplings

a. Only connect to machined spigot end of existing asbestos-cement pipe.

b. Do not connect to existing asbestos-cement pipe barrel.

c. Remove existing asbestos-cement coupling so that spigot end of asbestos-cement pipe to remain is not nicked, marred, or otherwise damaged.

d. Clean spigot end of asbestos-cement pipe prior to installation of transition coupling.

B. Cleaning Sleeve Type Couplings

1. Wash and wipe coupling clean of dirt, oil, grease, and other foreign matter.

2. Wipe coupling dry.

3. Wipe each gasket clean of dirt, dust, and other foreign matter.

C. Joining Pipe with Sleeve Type Couplings

1. Brush pipe and gaskets with soapy water.

2. Slip coupling gland on end of each pipe with gland extension toward the end of pipe.

3. Place coupling rubber gasket on end of each pipe with thick edge of gasket toward gland.

4. Place coupling sleeve over the end of one of the pipes being joined.
5. Align ends of pipe being joined.
6. Adjust coupling sleeve and gaskets so that gaskets are equal distance from both pipe ends.
7. Move coupling glands into position against gasket faces.
8. Loosely assemble coupling bolts and nuts.
9. Evenly tighten bolts and nuts.
10. Tighten bolts and nuts so that coupling joints will not leak.
11. Do not over-torque bolts and nuts.
12 Bring pipe and coupling to correct line and grade. Do not exceed deflection limits recommended by coupling manufacturer.
13. Secure buried pipe, fitting, or valve with haunching and backfill specified in Section 31 23 43 Pipe Haunching and Backfill.

3.07 MANUFACTURERS' REPRESENTATIVE

A. Pipe Manufacturer's Representative

1. Provide services of pipe manufacturer's representative as required to obtain correct installation of pipe.
2. Provide assistance of pipe manufacturer's representatives at no additional cost to the Owner.

B. Fitting Manufacturer's Representative

1. Provide services of fitting manufacturer's representative as required to obtain correct installation of fittings, and accessories.
2. Provide assistance of fitting manufacturer's representatives at no additional cost to the Owner.

C. Joint Restraining Device Manufacturer's Representative

1. Provide services of joint restraining device manufacturer's representative as required to obtain correct installation of joint restraining devices and accessories.
2. Provide assistance of joint restraining device manufacturer's representatives at no additional cost to the Owner.

END OF SECTION 33 36 23.24

SECTION 33 36 23.25

ASTM D1785 SCHEDULE 80 PVC PIPE AND FITTINGS

PART 1 – GENERAL

1.01 SUMMARY

A. Section Includes: Requirements for ASTM D1785 Schedule 80 PVC utility pipe, fitting, and accessories.

1.02 REFERENCES

A. General: References to standards, specifications, manuals, or codes of any technical society, organization or association, or to the Laws or Regulations of any government authority, whether such reference be specific or by implication, shall mean the latest standard, specification, manual, code, or Laws or Regulations in effect at the time of opening of Bids (or, on the Effective Date of the Agreement if there were no Bids), except as may be otherwise specifically stated in the Contract Documents.

B. ANSI Standards

1. ANSI B16.5 Pipe Flanges and Flanged Fittings, Steel Nickel Alloy and Other Special Alloys
2. ANSI B20.1 Pipe Threads, General Purpose (Inch)

C. ASTM Standards

1. ASTM A193 Specification for Alloy-Steel and Stainless Steel Bolting Materials for High-Temperature Service
2. ASTM A194 Specification for Carbon and Alloy Steel Nuts for Bolts for High-Pressure and High-Temperature Service
3. ASTM D1784 Specification for Rigid Poly(Vinyl Chloride) (PVC) Compounds and Chlorinated Poly(Vinyl Chloride) (CPVC) Compounds
4. ASTM D1785 Specification for Poly(Vinyl Chloride) (PVC) Plastic Pipe, Schedules 40, 80, and 120
5. ASTM D2464 Specification for Threaded Poly(Vinyl Chloride) (PVC) Plastic Pipe Fittings, Schedule 80
6. ASTM D2467 Specification for Socket-Type Poly(Vinyl Chloride) (PVC) Plastic Pipe Fittings, Schedule 80
7. ASTM D2564 Specification for Solvent Cements for Poly(Vinyl Chloride) (PVC) Plastic Pipe and Fittings
8. ASTM D2672 Specification for Joints for IPS PVC Pipe Using Solvent Cement
9. ASTM D2855 Practice for Making Solvent-Cemented Joints with Poly(Vinyl Chloride) (PVC) Pipe and Fittings
10. ASTM D4024 Specification for Reinforced Thermosetting Resin (RTR) Flanges
11. ASTM F402 Practice for Safe Handling of Solvent Cements, Primers, and Cleaners Used for Joining Thermoplastic Pipe and Fittings

1.03 DEFINITIONS

A. Buried Pipe and Fittings: Pipe and fittings installed in trenches and covered with soil. Pipe and fittings beneath structures and encased in concrete.

B. Exposed Pipe and Fittings: Pipe and fittings that are not buried. Exposed pipe and fittings include: pipe and fittings outdoors aboveground; pipe and fittings in buildings; pipe and fittings on the interior of tanks; pipe and fittings on the interior of vaults; and pipe and fittings on the interior of pits.

C. Size: Pipe and fittings sizes and references to pipe diameter on the Drawings and in the Specifications are intended to be nominal size or diameter, and shall be interpreted as nominal size or diameter.

1.04 SUBMITTALS

A. General: As specified in:

1. Section 01 33 00 Submittal Procedures;
2. Section 01 33 23 Shop Drawings, Product Data, and Samples; and
3. This Section.

B. Submit product data for Schedule 80 PVC pipe and fittings including the following:

1. Reference to Section 33 26 23.25 ASTM D1785 Schedule 80 PVC Reclaimed Water Utility Pipe and Fittings;
2. Product manufacturer's specifications;
3. Pipe materials of construction;
4. Flange joint gasket materials;
5. Flange joint bolt and nut materials;
6. Thread joint sealant materials; and
7. Additional information required to evaluate proposed product's compliance with the Contract Documents.

1.05 QUALITY ASSURANCE

A. Regulatory Requirements: Schedule 80 PVC pipe and fittings in potable water service shall comply with the requirements of the Safe Drinking Water Act and shall be certified as suitable for contact with drinking water by an accredited certification organization in accordance with ANSI/NSF Standard 61.

B. Marking

1. Mark pipe and fittings.
2. Markings shall meet the requirements of applicable Standards.

C. Factory Tests

1. Test materials used in the manufacture of Schedule 80 PVC pipe and fittings.
2. Tests shall meet the requirements of applicable Specifications and Standards.

1.06 DELIVERY, STORAGE, AND HANDLING

A. General

1. Product Delivery: As specified in Section 01 65 00 Product Delivery Requirements.

2. Product Storage and Handling: As specified in Section 01 66 00 Product Storage and Handling.

B. Piping Products

1. Deliver pipe, fittings, and accessories in a clean and undamaged condition. Store pipe, fittings, and accessories off the ground.

2. Keep interior of pipe, fittings, and accessories free from dirt and foreign matter.

3. Store plastic pipe and fittings, gaskets, and other products which will be deteriorated by sunlight in a cool location out of direct sunlight.

PART 2 – PRODUCTS

2.01 SCHEDULE 80 PVC PIPE AND FITTINGS

A. Schedule 80 PVC Pipe

1. Material Standard for Schedule 80 PVC Pipe: ..... ASTM D1784, Class 12454-B.

2. Pipe Standard for Schedule 80 PVC Pipe: ..... ASTM D1785, Schedule 80.

B. Fittings for Schedule 80 PVC Pipe

1. Fitting Material: ..... PVC

2. Fitting Material Standard: ..... ASTM D1784, Polyvinyl Chloride shall be Class 12454-B.

3. PVC Fittings

a. Fitting Standard for Socket Solvent Weld Fittings: ..... ASTM D2467.

b. Fitting Standard for Threaded Joint Fittings: ..... ASTM D2464.

C. Pipe and Fitting Joints for Schedule 80 PVC Pipe and Fitting

1. Joints for Buried Schedule 80 PVC Pipe and Fittings

a. Pipe to Pipe Joints: ..... Solvent socket weld.

b. Pipe to Fitting Joints: ..... Solvent socket weld.

c. Fitting to Fitting Joints: ..... Solvent socket weld.

d. Pipe to Valve Joints: ..... Solvent socket weld or threaded.

e. Fitting to Valve Joints: ..... Solvent socket weld or threaded.

f. Schedule 80 PVC Piping to Other Piping Materials: ..... Threaded.

2. Joints for Exposed Schedule 80 PVC Pipe and Fittings

a. Pipe to Pipe Joints:..... Solvent socket weld.

b. Pipe to Fitting Joints: ..... Solvent socket weld.

c. Fitting to Fitting Joints:..... Solvent socket weld.

d. Pipe to Valve Joints:.....Solvent socket weld, threaded, or flange.

e. Fitting to Valve Joints: .....Solvent socket weld, threaded, or flange.

f. Schedule 80 PVC Piping to .....Threaded or flange. Other Piping Materials:

2.02 SOLVENT WELD JOINTS FOR SCHEDULE 80 PVC PIPE AND FITTINGS

A. Solvent Weld Joint Standard for..... ASTM D2672 Schedule 80 PVC Pipe and Fittings:

B. Primer for PVC Solvent Socket Weld Pipe and Fittings

1. Material: .....Stabilized tetrahydrofuran, or equal.

2. Installation Condition Criteria:..... Hot, windy conditions.

C. Solvent Joint Cement

1. Material Standard:..... ASTM D2564.

2. Cement Container Size: .....No larger than one pint.

3. Cement Applicator:.....Dauber secured to the container lid.

2.03 THREADED JOINTS FOR SCHEDULE 80 PVC PIPE AND FITTINGS

A. Thread Standard for Schedule 80 ..... ANSI B20.1. PVC Pipe and Fittings:

B. Threaded Joint Sealant for Schedule 80 PVC Pipe and Fittings

1. Threaded joint sealant for Schedule 80 PVC pipe and fittings shall be NSF tested and certified.

2. Threaded joint sealant for Schedule 80 PVC pipe and fittings shall be non-hardening, soft setting formulation that remains crushable to -50°F.

3. Threaded joint sealant for Schedule 80 PVC pipe and fittings shall be non-corrosive and non-conductive.

4. Threaded joint sealant for Schedule 80 PVC pipe and fittings shall seal joints between PVC threaded pipe and PVC threaded sockets and joints between PVC threaded pipe and metal threaded sockets.

5. Thread sealant for Schedule 80 PVC pipe and fittings shall be Spears Blue 75 Thread Sealant, or equal.

2.04 FLANGES AND FLANGE JOINT ACCESSORIES FOR SCHEDULE 80 PVC PIPE AND FITTINGS

A. Flanges for Schedule 80 PVC Pipe and Fittings

1. Flange Material for Schedule 80..... PVC. PVC Pipe and Fittings:

2. Flange Standard for Schedule 80 PVC Pipe and Fitting Flanges: ..... ASTM D4024.
3. Dimension Standard for Schedule 80 PVC Pipe and Fitting Flanges: .....ANSI B16.5, Class 150.
4. Face Type for Schedule 80 PVC Pipe and Fitting Flanges: .....Flat.

B. Flange Joint Accessories for Schedule 80 PVC Pipe and Fittings, General

1. Flange Joint Gaskets, General
   a. Gasket Type: ..... Full face.
   b. Gasket Thickness: ..... 1/8-inch.
   c. Gasket Material: ..... EPDM
2. Bolts for Flange Joints, General
   a. Type: .....semi-finished regular hexagon head cap screws.
   b. Standard:.....ASTM A193.
   c. Threads: ..... UNC threads.
   d. Bolt Material: .....Hastelloy C
3. Studs for Flange Joints, General
   a. Standard:.....ASTM A193.
   b. Threads: ..... UNC threads.
   c. Length: .....Extend through nuts a minimum of 3/8-inch.
   d. Stud Material: .....Hastelloy C
4. Nuts for Flange Joints, General
   a. Type: ..... Semi-finished regular hexagon nuts.
   b. Standard:.....ASTM A194.
   c. Threads: ..... UNC threads.
   d. Nut Material: .....Hastelloy C

PART 3 – EXECUTION

3.01 INSTALLATION

A. General: Install Schedule 80 PVC pipe, fittings, and accessories as specified in this Section and in Section 33 36 13.04 Piping Installation – General.

B. Thermal Expansion: Provide allowance for thermal expansion and contraction for exposed PVC pipe passing through a wall, floor, ceiling or partition by wrapping with an approved tape or pipe insulation, or by installing through an appropriately sized sleeve to allow for thermal movement.

C. Abrasion Protection: Provide protection against abrasion where PVC pipe comes in contact with other building members by wrapping pipe with an approved tape, pipe insulation or otherwise suitable method of isolation.

D. Adapters and Flanges

1. Install solvent socket weld to male-thread adapters or solvent socket weld to female-thread adapters adjacent to each threaded valve and threaded equipment connection in a Schedule 80 PVC pipe system, as appropriate to valve and equipment end connections.

2. Install Schedule 80 PVC flanges adjacent to each flanged valve and flanged equipment connection in a Schedule 80 PVC pipe system.

3.02 CUTTING SCHEDULE 80 PVC PIPE

A. Field cuts may be made for shorter than standard pipe lengths.

B. Field cut Schedule 80 PVC pipe with either hand or mechanical saws or pipe cutters. Use proper tool, machine, or tool and machine for PVC pipe.

C. Do not cut pipe by burning.

D. Do not flatten pipe ends. Do not crimp plastic pipe.

E. Pipe ends shall be saw cut square and perpendicular to pipe axis.

F. Examine cut ends for damage caused by cutting.

G. Finish cut ends of pipe. Square pipe ends and remove burrs. Smooth pipe ends.

3.03 SOLVENT SOCKET WELD JOINTS FOR PVC PIPE, FITTINGS, AND VALVES

A. Cleaning Sockets for Joining Solvent Cement PVC Pipe and Fittings

1. Wash and wipe socket clean of dirt, oil, grease, and other foreign matter.

2. Wipe socket dry.

B. Cleaning Spigot End of PVC Pipe

1. Remove dirt, debris, and other deleterious substances from spigot end of pipe.

2. Wipe spigot end of pipe dry.

C. Join PVC pipe, fittings, and valves with solvent socket weld joints as follows:

1. Solvent socket weld joints shall meet the requirements of ASTM D2855.

2. Handling of solvent cement shall meet the requirements of ASTM F402.

3. Secure buried pipe, fitting, or valve with haunching and backfill specified in Section 31 23 43 Pipe Haunching and Backfill.

3.04 THREADED JOINTS FOR PVC PIPE, FITTINGS, AND VALVES

A. Do not field thread PVC pipe.

B. Clean PVC threads by brushing with a stiff bristle brush. Remove dirt, spurs, and other substances which would interfere with joining and sealing. Do not damage threads.

C. Make joints leak-tight by use of NSF tested and certified thread sealant. Apply thread sealant in accordance with manufacturer's written recommendations. Thread sealant shall be Spears Blue 75 Thread Sealant, or equal.

D. Do not over-tighten threaded joints. Do not damage or mar pipe exterior with pipe wrench or other tools.

3.05 FLANGE JOINTS

A. Cleaning Joint Surfaces

1. Clean joint surfaces of the pipe, fittings, and valves being joined.
2. Wipe surfaces clean of dirt, oil, grease, and other foreign matter.
3. Wipe surfaces dry.
4. Wipe each gasket clean of dirt, dust, and other foreign matter.

B. Making Flange Joints

1. Align flange of pipe, fitting, or valve being installed with flange of receiving pipe, fitting, or valve.
2. Support pipe, fittings, and valves being joined so that flanges are properly aligned.
3. Lubricate bolts and nuts prior to installation of bolts and nuts.
4. Clean gasket. Remove sand, dirt, and other foreign matter from gasket. Inspect gasket for defects. Inspect gasket for damage.
5. Hold gasket so that one gasket hole is aligned with one of the two flange holes nearest top of flange. Place bolt through flange and gasket hole. Carefully allow gasket to rotate into position between flanges. Place second bolt in remaining flange hole nearest top of flange and through hole in gasket. Make sure all gasket holes are properly aligned with remainder of flange holes.
6. Place remainder of bolts in flange holes.
7. Install nuts on bolts. Run-up all nuts finger tight.
8. Tighten nuts to 30 percent of specified torque in a crisscrossed pattern as follows:
   a. Tighten one nut to 30 percent of specified torque;
   b. Tighten nut 180 degrees from first nut to 30 percent of specified torque;
   c. Tighten nut 90 degrees clockwise from first nut to 30 percent of specified torque;
   d. Tighten nut 270 degrees clockwise from first nut to 30 percent of specified torque;
   e. Tighten nuts adjacent to first four nuts, in a clockwise direction, to 30 percent of specified torque in the same crisscrossed sequence; and
   f. Continue advancing crisscrossed pattern, in a clockwise direction, until all nuts are tightened to 30 percent of specified torque.

9 Tighten nuts to 60 percent of specified torque in a crisscrossed pattern identical to the crisscrossed pattern used to tighten nuts to 30 percent of specified torque.

10 Tighten nuts to 90 percent of specified torque in a crisscrossed pattern identical to the crisscrossed pattern used to tighten nuts to 30 percent of specified torque.

11. Tighten nuts, in one final pass performed in a clockwise bolt-to-bolt sequence, to the following torque:

Size	Bolt Torque
½-inch through 1½-inch Pipe and Fittings	10 to 15 ft.-lbs
2-inch through 4-inch Pipe and Fittings	20 to 30 ft.-lbs
6-inch and 8-inch Pipe and Fittings	33 to 50 ft.-lbs
10-inch Pipe and Fittings	53 to 75 ft.-lbs
12-inch Pipe and Fittings	80 to 110 ft.-lbs

3.06 JOINING SCHEDULE 80 PVC PIPE WITH SLEEVE TYPE COUPLINGS

A. Pipe Preparation for Sleeve Type Couplings

1. Remove dirt, debris, and other deleterious substances from plain end of PVC pipe, and wipe end of pipe dry.
2. Length of PVC pipe end preparation shall not be less than 12 inches from end of pipe.
3. PVC pipe OD shall not be more than 1/64-inch smaller than the standard outside diameter of PVC pipe.

B. Cleaning Sleeve Type Couplings

1. Wash and wipe coupling clean of dirt, oil, grease, and other foreign matter.
2. Wipe coupling dry.
3. Wipe each gasket clean of dirt, dust, and other foreign matter.

C. Joining Pipe with Sleeve Type Couplings

1. Brush pipe and gaskets with soapy water.
2. Slip coupling gland on end of each pipe with gland extension toward the end of pipe.
3. Place coupling rubber gasket on end of each pipe with thick edge of gasket toward gland.
4. Place coupling sleeve over the end of one of the pipes being joined.
5. Align ends of pipe being joined.
6. Adjust coupling sleeve and gaskets so that gaskets are equal distance from both pipe ends.
7. Move coupling glands into position against gasket faces.
8. Loosely assemble coupling bolts and nuts.
9. Evenly tighten bolts and nuts.
10. Tighten bolts and nuts so that coupling joints will not leak.

11. Do not over-torque bolts and nuts.
12 Bring pipe and coupling to correct line and grade. Do not exceed deflection limits recommended by coupling manufacturer.
13. Secure buried pipe, fitting, or valve with haunching and backfill specified in Section 31 23 43 Pipe Haunching and Backfill.

END OF SECTION 33 36 23.25

THIS PAGE INSERTED SO THAT FIRST PAGE OF THE FOLLOWING SECTION STARTS ON THE FRONT FACE OF A PAGE PRINTED ON BOTH SIDES

SECTION 33 36 23.26

AWWA C906 HDPE PIPE AND FITTINGS

PART 1 – GENERAL

1.01 SUMMARY

A. Section Includes: Requirements for AWWA C906 high density polyethylene (HDPE) pipe, fittings, and accessories.

1.02 REFERENCES

A. General: References to standards, specifications, manuals, or codes of any technical society, organization or association, or to the Laws or Regulations of any government authority, whether such reference be specific or by implication, shall mean the latest standard, specification, manual, code, or Laws or Regulations in effect at the time of opening of Bids (or, on the Effective Date of the Agreement if there were no Bids), except as may be otherwise specifically stated in the Contract Documents.

B. ANSI Standards

1. ANSI B16.1 — Cast Iron Pipe Flanges and Flanged Fittings, Class 25, 125, 250 and 800
2. ANSI B16.5 — Pipe Flanges and Flanged Fittings, Steel Nickel Alloy and Other Special Alloys

C. ANSI/AWWA Standards

1. ANSI/AWWA C110/A21.10 — Ductile-Iron and Gray-Iron Fittings 3-in. Through 48-in. for Water and Other Liquids
2. ANSI/AWWA C111/A21.11 — Rubber-Gasket Joints for Ductile-Iron and Gray-Iron Pressure Pipe and Fittings
3. ANSI/AWWA C906 — Polyethylene (PE) Pressure Pipe and Fittings, 4 In. (100 mm) Through 63 In. (1,575 mm), for Water Distribution and Transmission

D. ASTM Standards

1. ASTM A193 — Specification for Alloy-Steel and Stainless Steel Bolting Materials for High-Temperature Service
2. ASTM A194 — Specification for Carbon and Alloy Steel Nuts for Bolts for High-Pressure and High-Temperature Service
3. ASTM D2837 — Test Method for Obtaining Hydrostatic Design Basis for Thermoplastic Pipe Materials
4. ASTM D3261 — Specification for Butt Fusion Polyethylene (PE) Plastic Fittings for Polyethylene (PE) Plastic Pipe and Tubing
5. ASTM D3350 — Specification for Polyethylene Plastics Pipe and Fitting Materials
6. ASTM F593 — Specification for Stainless Steel Bolts, Hex Cap Screws, and Studs
7. ASTM F594 — Specification for Stainless Steel Nuts

8. ASTM F714 Specification for Polyethylene (PE) Plastic Pipe (SDR-PR) Based on Outside Diameter

1.03 DEFINITIONS

A. Buried Pipe and Fittings: Pipe and fittings installed in trenches and covered with soil. Pipe and fittings beneath structures and encased in concrete.

B. Exposed Pipe and Fittings: Pipe and fittings that are not buried. Exposed pipe and fittings include: pipe and fittings outdoors aboveground; pipe and fittings in buildings; pipe and fittings on the interior of tanks; pipe and fittings on the interior of vaults; and pipe and fittings on the interior of pits.

C. Casing Pipe: Pipe installed by directional bore method, jack and bore method, or open cut method for the purpose of stabilizing an opening in soil, rock, or soil and rock for the installation of a fluid conveying pipe inside the casing pipe. Pipe installed by directional bore method, jack and bore method, or open cut method for the purpose of providing separation between a fluid conveying carrier pipe inside the casing pipe and other pipe outside the casing pipe.

D. Pipe, fittings, and valve sizes and references to pipe diameter on the Drawings and in the Specifications are intended to be nominal size or diameter, and shall be interpreted as nominal size or diameter.

1.04 SUBMITTALS

A. General: As specified in:

1. Section 01 33 00 Submittal Procedures;
2. Section 01 33 23 Shop Drawings, Product Data, and Samples; and
3. This Section

B. Submit product data for AWWA C906 HDPE pipe and fittings including the following:

1. Product manufacturer's specifications;
2. Pipe materials of construction;
3. Fitting materials of construction;
4. Additional information required to evaluate proposed product's compliance with the Contract Documents.

C. Submit Affidavit of Compliance that all HDPE pipe and fittings furnished for this project comply with the requirements of ANSI/AWWA C906.

1.05 QUALITY ASSURANCE

A. Marking

1. Mark pipe and fittings.
2. Markings shall meet the requirements of applicable Standards.

B. Factory Tests

1. Test materials used in manufacture of AWWA C906 pipe and fittings.

C. Field Testing: Field test pipe, fittings, and appurtenances as specified in Section 33 34 36.06 Piping Testing.

1.06 DELIVERY, STORAGE, AND HANDLING

A. General

1. Product Delivery: As specified in Section 01 65 00 Product Delivery Requirements.

2. Product Storage and Handling: As specified in Section 01 66 00 Product Storage and Handling.

B. Piping Products

1. Deliver pipe, fittings, and accessories in a clean and undamaged condition. Store pipe, fittings, and accessories off the ground.

2. Keep interior of pipe, fittings, and accessories free from dirt and foreign matter.

3. Store plastic pipe and fittings, gaskets, and other products which will be deteriorated by sunlight in a cool location out of direct sunlight.

PART 2 – PRODUCTS

2.01 AWWA C906 PIPE AND FITTINGS

A. AWWA C906 HDPE Pipe and Fitting Manufacturer and Brand

1. General: Pipe and fittings shall be produced by the same manufacturer.

2. Manufacturer

a. Chevron Phillips Chemical Company, Performance Pipe;

b. PolyPipe, Inc.;

c. Or Equal.

B. AWWA C906 HDPE Pipe and Fitting Material

1. HDPE Pipe and Fitting Material Type: PE3408 high density polyethylene

2. HDPE Pipe and Fitting Material Standards

a. Standard PE Code Designation: ..... PE 3408

b. Minimum Cell Classification: ..... ASTM D3350, PE 334434C or PE 334434E

c. Hydrostatic Design Basis at 73.4°F (23°C): ..... ASTM D2837, 1,600 psi (11.03 MPa)

C. AWWA C906 HDPE Pipe and Fitting Standards

1. Pipe Standard: .....ASTM F714.

2. Fitting Standard: ..... ASTM D3261.

D. Pressure Rating and Dimension Ratio for AWWA C906 HDPE Pipe and Fittings:

1. Direct Buried Pressure Pipe and Fittings

a. Pressure Rating:..... 160 psi.

b. Dimension Ratio: .....DR 11.

2. Exposed Pressure Pipe and Fittings

a. Pressure Rating:..... 160 psi.

b. Dimension Ratio: .....DR 11.

3. Pressure Carrier Pipe Inside of Casing Pipe

a. Pressure Rating:..... 160 psi.

b. Dimension Ratio: .....DR 11.

4. Casing Pipe

a. Pressure Rating:..... 160 psi.

b. Dimension Ratio: .....DR 11.

E. Outside Diameter for AWWA C906 HDPE Pipe and Fittings

1. Pressure Pipe and Fittings

a. Direct Buried Pressure Pipe and Fitting: Ductile Iron Outside Diameter (DIOD).

b. Pressure Carrier Pipe Inside of Casing Pipe: Ductile Iron Outside Diameter (DIOD).

c. Exposed Pressure Pipe and Fittings: Ductile Iron Outside Diameter (DIOD) or Iron Pipe Size (IPS) System.

2. Casing Pipe: Ductile Iron Outside Diameter (DIOD) or Iron Pipe Size (IPS) System.

F. Color Identification

1. General

a. HDPE shall have not less than three equally spaced horizontal colored marking stripes.

b. Colored marking stripes shall be factory applied by the pipe manufacturer. Field applied marking stripes will not be accepted by the Engineer.

2. Marking Stripe Color:.....Blue, Green, or Magenta

2.02 JOINTS FOR AWWA C906 HDPE PIPE AND FITTINGS

A. Joint Type

1. HDPE Pipe to HDPE Pipe Joints:..... Thermal butt fusion.

2. HDPE Pipe to HDPE Fitting Joints: ..... Thermal butt fusion.

3. HDPE Pipe to Valve Joints:.....HDPE mechanical joint adapter with restraining device.

4. HDPE Pipe to AWWA C900 PVC Pipe:.....HDPE mechanical joint adapter with restrained ductile iron mechanical joint sleeve.

5. HDPE Pipe to AWWA C905 PVC Pipe:.....HDPE mechanical joint adapter

(14-inch through 24-inch) with restrained ductile iron mechanical joint sleeve.

6. HDPE Pipe to Schedule 80 PVC Pipe: ..... HDPE flange adapter.
7. HDPE Pipe to Buried Ductile Iron Pipe: .....HDPE mechanical joint adapter (4-inch through 24-inch) with restraining device.
8. HDPE Pipe to Exposed Ductile Iron Pipe: ..... HDPE flange adapter.

B. Thermal Butt Fusion Joints for AWWA C906 HDPE Pipe and Fittings

1. Thermal butt fusion joints shall meet requirements of HDPE pipe and fitting manufacturer.
2. Equipment used to make thermal butt fusion joints shall be furnished by, or approved by, the HDPE pipe and fitting manufacturer.
3. Personnel that make thermal butt fusion joints shall be certified by the HDPE pipe and fitting manufacturer.

C. Mechanical Joint Adapters

1. Manufacturer
   a. ISCO Industries;
   b. Chevron Phillips Chemical Company;
   c. Or Equal.
2. General
   a. Mechanical joint adapters shall properly join AWWA C906 HDPE pipe to mechanical joint bells, which meet the requirements of ANSI/AWWA C111/A21.11.
   b. Joint between mechanical joint adapter and HDPE pipe shall be thermal butt-fusion joint.
3. Pressure Rating and Dimension Ratio for Mechanical Joint Adapters
   a. Pressure Rating:..... 160 psi.
   b. Dimension Ratio: .....DR 11.

D. Flange Joint Adapters

1. Manufacturer
   a. ISCO Industries;
   b. Chevron Phillips Chemical Company;
   c. Or Equal.
2. General
   a. Flange joint adapters shall properly join AWWA C906 HDPE pipe to flanges, which meet the requirements of ANSI/AWWA C110/A21.10.
   b. Flange adapters shall be lap joint type. Each flange joint adapter shall include a HDPE stub end and a ductile iron back-up flange.
   c. Joint between stub end and HDPE pipe shall be thermal butt-fusion joint.

3. Stub Ends
    a. Stub End Material: ..... HDPE
    b. Stub End Pressure Rating: ..... 160 psi.
    c. Stub End Dimension Ratio: ..... DR 11.
4. Back-up Flanges
    a. Back-up Flange Material: ..... AISI 316 stainless steel
    b. Back-up Flange Dimension Standard
        1) Ductile Iron and Cast Iron Flanges: ..... ANSI B16.1, Class 125.
        2) Stainless Steel Flanges: ..... ANSI B16.5, Class 150.
    c. Back-up Flange Pressure Rating: ..... 150 psi, minimum.
5. Flange Joint Accessories
    a. Gaskets for Flange Joints
        1) Flange Joint Gasket Type for: ..... Ring. HDPE Pipe
        2) Flange Joint Gasket Thickness: ..... 1/8-inch.
        3) Flange Joint Gasket Material: ..... EPDM
    b. Bolts, Studs, and Nuts for Flange Joints
        1) Bolts for Flange Joints
            a) Type: ..... Semi-finished regular hexagon head cap screws.
            b) Material: ..... Hastelloy C.
            c) Standard: ..... ASTM A193.
            d) Threads: ..... UNC threads.
        2) Studs for Flange Joints
            a) Material: ..... Hastelloy C.
            b) Standard: ..... ASTM A193.
            c) Threads: ..... UNC threads.
            d) Length: ..... Extend through nuts a minimum of 1/2-inch.
        3) Nuts for Flange Joints
            a) Type: ..... Semi-finished regular hexagon nuts.
            b) Material: ..... Hastelloy C.
            c) Standard: ..... ASTM A194.
            d) Threads: ..... UNC threads.

PART 3 – EXECUTION

3.01 INSTALLATION, GENERAL

A. Install AWWA C906 HDPE pipe and fittings as specified in this Section and in Section 33 36 13.04 Piping Installation – General.

3.02 CUTTING HDPE PIPE

A. Field cuts may be made for shorter than standard pipe lengths.

B. HDPE pipe shall be cut by personnel making thermal butt fusion joints.

C. Field cut HDPE pipe with proper tool, machine, or tool and machine.

D. Do not cut pipe by burning.

E. Do not crimp HDPE pipe.

F. Pipe ends shall be saw cut square and perpendicular to pipe axis.

G. Examine cut ends for damage caused by cutting.

H. Finish cut ends of pipe.

1. Finish cut ends of HDPE pipe for thermal butt fusion joints in accordance with manufactuer's recommendations.

2. Finish plain end of HDPE pipe for mechanical joint as follows:

a. Bevel outside of the cut ends of pipe about one-quarter inch (1/4-inch) at an angle of about thirty degrees (30°).

b. Remove sharp and rough edges and burrs which might injure gasket.

3.03 THERMAL BUTT FUSION JOINTS FOR AWWA C906 HDPE PIPE AND FITTINGS

A. Cleaning Ends of HDPE Pipe: Remove dirt, debris, and other deleterious substances from end of pipe, and wipe end of pipe dry.

B. Joining HDPE Pipe and Fittings with Thermal Butt Fusion Joints

1. Make thermal butt fusion joints in accordance with the pipe and fitting manufacturer's recommendations, the fusion equipment manufacturer's written instructions, and as specified in this Section.

a. Prior to making thermal butt fusion joints, determine optimum range of fusion conditions, such as fusion temperature, interface pressure, and cooling time.

b. Thermal fusion shall be conducted only by persons who have received training in the use of fusion equipment in accordance with the recommendations of the pipe and fitting supplier or the fusion equipment supplier.

2. Bring pipe to correct line and grade.

3. Secure pipe with haunching and backfill specified in Section 31 23 43 Pipe Haunching and Trench Backfill.

3.04 JOINING DUCTILE IRON SLEEVES, FITTINGS, AND VALVES WITH MECHANICAL JOINTS TO AWWA C906 HDPE PIPE

A. General

1. Use adapters furnish or approved by HDPE pipe manufacturer to join HDPE pipe to ductile iron mechanical joint sleeves, fittings, and valves.
2. HDPE to ductile iron mechanical joint adapters shall be thermal butt fusion welded to HDPE pipe as specified in this Section.

B. Join AWWA C900 PVC pipe, or AWWA C905 PVC pipe to HDPE-to-ductile iron mechanical joint adapter with mechanical joint bell as follows:

1. Join adapter to HDPE pipe with thermal butt fusion joint as specified in this Section.
2. Brush pipe spigot and mechanical joint gasket with soapy water.
3. Slip mechanical joint gland on spigot end of pipe with gland extension toward the end of the pipe being installed.
4. Place mechanical joint rubber gasket on spigot end of pipe with thick edge of gasket toward gland.
5. Center spigot end of pipe in bell of previously installed pipe, fitting, or valve.
6. Push or pull pipe fully “home” as specified in this Section.
7. Push gasket into place within the bell with gasket evenly located around entire joint.
8. Move gland into position against face of gasket.
9. Loosely assemble joint bolts and nuts.
10. Evenly tighten nuts using a torque wrench. Alternately tighten nuts 180° apart. Torque for 4-inch through 24-inch mechanical joints with 3/4-inch bolts shall be 75 to 90 foot-pounds.
11. Bring pipe to correct line and grade.
    a. Deflect pipe after joining, if deflection is required.
    b. Deflection shall not exceed limits specified in Section 33 36 23.24 AWWA C900 and C905 Pipe and Fittings.
12. Secure buried pipe and fittings with haunching and backfill specified in Section 31 23 43 Pipe Haunching and Backfill.

C. Join ductile iron sleeves, fittings, and valves to HDPE-to-ductile iron mechanical joint adapter with spigot end that fits into ductile iron mechanical joint bell as follows:

1. Slip mechanical joint gland on adapter.
2. Join adapter to HDPE pipe with thermal butt fusion joint as specified in this Section.
3. Brush adapter spigot and mechanical joint gasket with soapy water.
4. Place mechanical joint rubber gasket on end of adapter with thick edge of gasket toward gland.

5. Push gasket into place against adapter collar.
6. Center bell of sleeve, fitting, or valve over end of adapter.
7. Pull sleeve, fitting, or valve fully “home” as specified in this Section.
8. Move gland into position against adapter collar.
9. Loosely assemble joint bolts and nuts.
10. Evenly tighten nuts using a torque wrench. Alternately tighten nuts 180° apart. Torque shall be within range specified in this Section.
11. Bring adapter and sleeve, fitting, or valve to correct line and grade. Do not deflect joint.
12. Secure adapter and sleeve, fitting, or valve with haunching and backfill specified in Section 31 23 43 Pipe Haunching and Backfill.

3.05 MANUFACTURERS' REPRESENTATIVE

A. Provide services of HDPE pipe and fitting manufacturer's representative as required to obtain correct installation of HDPE pipe and fittings.

B. Provide assistance of pipe and fitting manufacturer's representatives at no additional cost to the Owner.

END OF SECTION 33 36 23.26

THIS PAGE INSERTED SO THAT FIRST PAGE OF THE FOLLOWING SECTION STARTS ON THE FRONT FACE OF A PAGE PRINTED ON BOTH SIDES

SECTION 33 36 33.16

GATE VALVES

PART 1 – GENERAL

1.01 SUMMARY

A. Section Includes: Requirements for gate valves and accessories.

1.02 REFERENCES

A. General: References to standards, specifications, manuals, or codes of any technical society, organization or association, or to the Laws or Regulations of any government authority, whether such reference be specific or by implication, shall mean the latest standard, specification, manual, code, or Laws or Regulations in effect at the time of opening of Bids (or, on the Effective Date of the Agreement if there were no Bids), except as may be otherwise specifically stated in the Contract Documents.

B. ANSI Standards

1. ANSI B16.1 Cast Iron Pipe Flanges and Flanged Fittings, Class 25, 125, 250 and 800

C. ANSI/AWWA Standards

1. ANSI/AWWA C111/A21.11 Rubber-Gasket Joints for Ductile-Iron and Gray-Iron Pressure Pipe and Fittings
2. ANSI/AWWA C509 Resilient-Seated Gate Valves for Water Supply Service
3. ANSI/AWWA C515 Reduced-Wall, Resilient-Seated Gate Valves for Water Supply Service

D. ASTM Standards

1. ASTM A536 Specification for Ductile Iron Castings
2. ASTM D429 Test Methods for Rubber Property - Adhesion to Rigid Substrates

1.03 DEFINITIONS

A. Buried Valves: Valves installed in trenches, or excavations, and covered with soil.

B. Exposed Valves: Valves that are not buried. Exposed valves include valves outdoors aboveground, valves in buildings, valves on the interior of tanks, valves on the interior of vaults, and valves on the interior of pits.

C. Size: References to valve sizes on the Drawings and in the Specifications are intended to be nominal size, and shall be interpreted as nominal size.

1.04 SUBMITTALS

A. General: As specified in:

1. Section 01 33 00 Submittal Procedures;
2. Section 01 33 23 Shop Drawings, Product Data, and Samples; and

3. This Section.

B. Submittals for gate valves shall include, but not necessarily be limited to, the following:

1. Product data

2. Actuator and accessories for each valve.

1.05 QUALITY ASSURANCE

A. Testing: Test valves as specified in this Section.

1.06 DELIVERY, STORAGE, AND HANDLING

A. General

1. Product Delivery: As specified in Section 01 65 00 Product Delivery Requirements.

2. Product Storage and Handling: As specified in Section 01 66 00 Product Storage and Handling.

B. Gate Valves

1. Deliver valves in a clean and undamaged condition. Store valves off the ground.

2. Keep interior of valves free from water, dirt, and other foreign matter.

3. Keep valve wedge encapsulation material out of direct sunlight.

4. Do not stack valves. Do not stack other products on valves.

PART 2 – PRODUCTS

2.01 GATE VALVES, GENERAL

A. Gate valves shall be as specified in this Section and in Section 33 36 13.03 Pipe, Fittings, Valves, Piping Specialties, and Accessories - General.

2.02 GATE VALVES, 2-INCH THROUGH 12-INCH

A. Approved Manufacturers – Gate Valves

1. Mueller;

2. CLOW / Kennedy;

3. American;

B. Valve Type and Operator for Gate Valves, 2-inch through 12-inch

1. Buried Gate Valves, 2-inch through 12-inch: Resilient seat, non-rising stem gate valves with 2-inch operating nut.

2. Exposed Gate Valves, 2-inch through 12-inch, with Flange Joints: Resilient seat, rising stem gate valves with;
    a. Outside screw and yoke; and
    b. Handwheel, or chainwheel and chain, as appropriate to valve location.
3. Exposed Gate Valves, 2-inch through 12-inch, with Mechanical Joints: Resilient seat, non-rising stem gate valves with handwheel, or chainwheel and chain, as appropriate to valve location.

C. Valve Standard for Gate Valves, 2-inch through 12-inch
1. Gate Valves, 2-inch through 12-inch, shall meet the requirements of ANSI/AWWA C509 or ANSI/AWWA C515.
2. Gate Valves, 2-inch through 12-inch, shall be UL/FM approved.

D. Working Pressure Rating for Gate Valves, 2-inch through 12-inch: 200 psi, minimum.

E. Materials for Gate Valves, 2-inch through 12-inch
1. General: ..... Gate valve materials shall be as specified in this Section.
2. Valve Wedge Encapsulation Material: ..... EPDM
3. Exposed Bolts and Nuts: ..... AISI 304 stainless steel.

F. Stem Stuffing Box for Gate Valves, 2-inch through 12-inch
1. Type: O-ring seal type with two rings located above thrust collar
2. O-ring Replacement: O-rings shall be replaceable with valve fully open and subjected to full rated working pressure.

G. Valve Coating for Gate Valves, 2-inch through 12-inch: Valve body and bonnet shall be coated with fusion bonded epoxy both interior and exterior.

2.03 JOINTS FOR GATE VALVES

A. Joints for Buried Gate Valves
1. 2-inch through 3-inch Gate Valves: ..... Integrally cast female NPT.
2. 4-inch through 24-inch Gate Valves
    a. Joint Type: ..... Integrally cast mechanical joint.
    b. Joint Standard: ..... ANSI/AWWA C111/A21.11.

B. Joints for Exposed Gate Valves
1. Joint Type: ..... Integrally cast flange.
2. Flange Dimension Standard: ..... ANSI B16.1.

2.04 OPENING DIRECTION FOR GATE VALVES

A. Match standard for existing system.

B. Valve shall open by turning stem counter clockwise if there is no standard for existing system.

C. Cast word "Open" and an "Arrow" in metal to indicate direction to open.

2.05 COATING FOR GATE VALVES

A. Internal Ferrous Surfaces

1. Material: ..... Fusion bonded epoxy.

2. Minimum Dry Film Thickness: ..... 12 mils.

B. External Ferrous Surfaces

1. Provide factory coating as specified in Section 05 05 13.13 Shop-Applied Coatings for Metal – Paint.

2. Factory coating shall be primer or finish coating compatible with field painting specified in Division 09 Finishes.

PART 3 – EXECUTION

3.01 INSTALLATION

A. Install gate valves, operators, and accessories as specified in this Section and in Section 33 36 13.04 Piping Installation - General.

B. Install gate valves, operators, and accessories in accordance with valve manufacturer’s written installation instructions.

C. Install gate valves, operators, and accessories as shown on the Drawings.

B. Install joints for valve connections to inlet and outlet piping as specified in appropriate piping material Section.

3.02 FIELD TESTS

A. Hydrostatic Test: Hydrostatically test valves with piping in which valves are installed.

B. Functional Test: Demonstrate proper operation of valves to Engineer.

3.03 MANUFACTURERS' REPRESENTATIVE

A. Provide services of valve manufacturer's representative as required to obtain correct installation of valves and accessories.

B. Provide assistance of valve manufacturer's representatives at no additional cost to the Owner.

END OF SECTION 33 36 33.16

SECTION 36 33.33

UTILITY VALVE BOXES

PART 1 – GENERAL

1.01 SUMMARY

A. Section Includes: Requirements for utility valve boxes.

1.02 SUBMITTALS

A. General: As specified in:

1. Section 01 33 00 Submittal Procedures;
2. Section 01 33 23 Shop Drawings, Product Data, and Samples; and
3. This Section.

B. Submit product data for valve boxes.

C. Submit schedule that shows valve box marking.

1.03 DELIVERY, STORAGE, AND HANDLING

A. General

1. Product Delivery: As specified in Section 01 65 00 Product Delivery Requirements.
2. Product Storage and Handling: As specified in Section 01 66 00 Product Storage and Handling.

B. Valve Boxes

1. Deliver valve boxes in a clean and undamaged condition.
2. Store valve boxes off the ground. Do not stack valve boxes. Do not stack other products on valve boxes.
3. Keep interior of valve boxes free from water, dirt, and other foreign matter.

PART 2 – PRODUCTS

2.01 VALVE BOXES - GENERAL

A. Valve box manufacturer and model shall be as designated in Owner's standard details, Owner's standard specifications, or both.

B. If valve box manufacturer is not designated in Owner's standard details or specifications, valve box manufacturer and model shall be as specified in this Section.

2.02 VALVE BOXES

A. General: Valve boxes shall meet the requirements of this Article, unless otherwise specified by Owner.

B. Valve Box Manufacturer and Model

1. Bingham & Taylor, Fig. No. 4907 with appropriate Fig. No. 4909 base; - Previously Opelika Foundry
2. Tyler/Union, 6860 Series with appropriate base;
3. Russco;
4. SIP Industries;

C. Description: Three-piece, roadway extension type

1. Lower Base Piece
   a. Bevel lower base piece at bottom to fit around stuffing-box gland, or valve operator, as appropriate to valve.
   b. Base size shall be proper for valve.
2. Upper Barrel
   a. Provide upper barrel with flange on lower end.
   b. Upper end of barrel shall be constructed in the form of a socket to receive valve box cover.
   c. Upper barrel shall be sized to telescope over lower base piece.
   d. Upper barrel shall be proper length for vertical distance from valve to finish grade.
3. Valve Box Cover
   a. Valve box cover shall fit into socket in upper barrel.
   b. Cast wording into top of removable cover to indicate valve service.
      1) Wording shall be as designated in Owner's standard details, Owner's standard specifications, or both.
      2) If wording is not designated in Owner's standard details or specifications, wording shall be as follows:
         a) Potable Water ..... "WATER"
         b) Raw Water ..... "WATER"
         c) Concentrate Disposal ..... "SEWER"

D. Material: Cast iron from valve to finished grade

E. Interior and Exterior Coating: Asphaltum paint.

PART 3 – EXECUTION

3.01 SETTING VALVE BOXES

A. Install valve boxes as shown on the Drawings and specified in this Section. Install valve boxes in accordance with the manufacturer's written instructions.

B. Center valve box on valve, or valve operator, as appropriate to valve. Valve box cover shall not rest on valve bonnet, valve body, or valve operator.

C. Set valve box so that operating wrench can engage valve operating nut. Set valve box so that centerlines of valve box sections are aligned on a continuous straight line. Set valve box plumb unless valve alignment prevents engagement of valve operating nut by operating wrench. Notify Engineer prior to installation of valve box, if valve alignment will prevent engagement of valve operating nut by operating wrench if valve box is installed plumb. If valve alignment is required to be such that valve alignment will prevent engagement of valve operating nut by operating wrench, set valve box so that valve box centerline is aligned to valve operating nut shaft, unless otherwise directed by the Engineer.

C. Tamp backfill around valve box to a distance of four feet on all sides of box, or to undisturbed trench face if less than four feet.

D. Adjust valve box to grade as follows:

1. Adjust valve box in temporary pavement to temporary grade prior to allowing traffic on temporary pavement. Adjust valve box so that top of valve box is not less than 1/4 inch or more than 1 inch above adjacent temporary pavement surface.

2. Adjust valve box in final pavement to final grade prior to installation of pavement wearing surface.

3. Adjust valve box in unpaved area to final grade prior to finish grading and installation of sod or landscape plantings.

E. Construct reinforced concrete collar around top of valve box. Construct reinforced concrete collar as shown on the Drawings.

1. Set top of valve box and top surface of reinforced concrete collar as follows:

a. For valve boxes in pavement, set top of valve box head and concrete collar flush to finished pavement surface.

b. For valve boxes in unpaved areas, set top of valve box head and concrete collar not less than 1/4 inch or more than 1/2 inch above adjacent finish grade.

2. Provide valve data tag if shown on the Drawings or if required by Owner.

a. Valve tag shall be as shown in Owner’s, or Utility’s, standard details, standard specifications, or both.

b. If valve tag is not shown in Owner’s, or Utility’s, standard details or specifications, valve tag shall be as specified in Section 33 36 33.33 Valve Identification.

3.02 PROTECTION

A. Protect new and existing valve boxes against damage. Protect new and existing valve boxes against displacement. Provide temporary barricades, bollards, or other protection as required to prevent new and existing valve box damage or displacement.

B. Notify Engineer if existing valve box is found to be damaged prior to construction. Notify Engineer if existing valve box is found to be displaced from its proper position prior to construction. If Engineer is not notified of existing valve box damage or displacement prior to start of construction activities that could damage or displace valve box, valve box damage or displacement will be assumed to be caused by construction activities.

C. Reset any new valve box moved from its original position. Reset any new valve box that does not meet the requirements of this Section. Reset any existing valve box moved, by construction activities, from its position at start of construction. Reset valve box at no additional cost to the Owner. Reset valve boxes shall meet the requirements of this Section.

D. Replace damaged valve boxes. Replace damaged valve boxes at no additional cost to the Owner.

   1. Replace damaged parts of new valve boxes.
   2. Replace damaged existing valve boxes in their entirety.
   3. Replacement valve boxes shall meet the requirements of this Section

3.03 PAINTING

A. Paint valve box cover.

   1. Color shall be as designated in Owner's standard details, Owner's standard specifications, or both.
   2. If color is not designated in Owner's standard details or specifications, color shall be as follows:

      a. Membrane Treatment Concentrate Disposal .....Green

B. Painting shall be as specified in the appropriate Division 9 Sections.

3.04 CLEANING

A. Remove dirt and debris from valve box interior.

B. Clean grease, oil, dirt, or any other debris from valve box cover.

END OF SECTION 33 36 33.33

SECTION 33 36 43.53

PIPING SLEEVES, ADAPTERS, AND COUPLINGS

PART 1 – GENERAL

1.01 SUMMARY

A. Section Includes: Requirements for piping sleeves, adapters, couplings, and accessories.

1.02 REFERENCES

A. General: References to standards, specifications, manuals, or codes of any technical society, organization or association, or to the Laws or Regulations of any government authority, whether such reference be specific or by implication, shall mean the latest standard, specification, manual, code, or Laws or Regulations in effect at the time of opening of Bids (or, on the Effective Date of the Agreement if there were no Bids), except as may be otherwise specifically stated in the Contract Documents.

B. ANSI Standards

1. ANSI B16.1 Cast Iron Pipe Flanges and Flanged Fittings, Class 25, 125, 250 and 800

C. ANSI/AWWA Standards

1. ANSI/AWWA C110/A21.10 Ductile-Iron and Gray-Iron Fittings 3-in. Through 48-in. for Water and Other Liquids
2. ANSI/AWWA C111/A21.11 Rubber-Gasket Joints for Ductile-Iron and Gray-Iron Pressure Pipe and Fittings

D. ASTM Standards

1. ASTM A126 Specification for Gray Iron Castings for Valves, Flanges, and Pipe Fittings
2. ASTM A193 Specification for Alloy-Steel and Stainless Steel Bolting Materials for High-Temperature Service
3. ASTM A194 Specification for Carbon and Alloy Steel Nuts for Bolts for High-Pressure and High-Temperature Service
4. ASTM A536 Specification for Ductile Iron Castings
5. ASTM F593 Specification for Stainless Steel Bolts, Hex Cap Screws, and Studs
6. ASTM F594 Specification for Stainless Steel Nuts

1.03 DEFINITIONS

A. Buried Sleeves, Adapters, and Couplings: Sleeves, adapters, and couplings installed in trenches and covered with soil. Sleeves, adapters, and couplings beneath structures and encased in concrete.

B. Exposed Sleeves, Adapters, and Couplings: Sleeves, adapters, and couplings that are not buried. Exposed sleeves, adapters, and couplings includes sleeves, adapters,

and couplings outdoors aboveground, piping in buildings, sleeves, adapters, and couplings on the interior of tanks, sleeves, adapters, and couplings on the interior of vaults, sleeves, adapters, and couplings on the interior of pits.

C. Size: Pipe, sleeve, adapter, and coupling sizes and references to pipe diameter on the Drawings and in the Specifications are intended to be nominal size or diameter, and shall be interpreted as nominal size or diameter.

1.04 SUBMITTALS

A. General: As specified in:

1. Section 01 33 00 Submittal Procedures;
2. Section 01 33 23 Shop Drawings, Product Data, and Samples; and
3. This Section.

B. Submit product data for sleeves, adapters, and couplings.

1.05 QUALITY ASSURANCE

A. Testing: Test sleeves, adapters, and couplings with piping in which sleeves, adapters, and couplings are installed.

1.06 DELIVERY, STORAGE, AND HANDLING

A. General

1. Product Delivery: As specified in Section 01 65 00 Product Delivery Requirements.
2. Product Storage and Handling: As specified in Section 01 66 00 Product Storage and Handling.

B. Piping Products

1. Deliver sleeves, adapters, couplings, and accessories in a clean and undamaged condition. Store sleeves, adapters, couplings, and accessories off the ground.
2. Keep interior of sleeves, adapters, couplings, and appurtenances free from dirt and foreign matter.
3. Store gaskets and other products which will be deteriorated by sunlight in a cool location out of direct sunlight.
4. Gaskets shall not come in contact with petroleum products.
5. Do not stack sleeves, adapters, or couplings.

PART 2 – PRODUCTS

2.01 SLEEVE-TYPE, DUCTILE IRON COUPLINGS (3-INCH THROUGH 16-INCH)

A. Manufacturers and Products

1. Straight Couplings for Ductile Iron Pipe OD:

a. JCM Industries, JCM 210;

b. Or equal straight sleeve type, ductile iron couplings for ductile iron outside diameter.

2. Restrained Joint, Straight Couplings for Ductile Iron Pipe:

a. JCM Industries, JCM 219;

b. Or equal straight sleeve type, ductile iron, restrained joint, couplings for ductile iron pipe.

3. Straight Couplings for Steel Pipe OD:

a. JCM Industries, JCM 211;

b. Or equal straight sleeve type, ductile iron couplings for steel pipe outside diameter.

4. Transition Couplings:

a. JCM Industries, JCM 212;

b. Or equal ductile iron, transition couplings.

B. Coupling Description

1. Sleeve type couplings for 3-inch through 16-inch pipe shall be ductile iron.

2. Sleeve-type, ductile iron coupling shall include the following components:

a. One ductile iron middle ring;

b. Two ductile iron follower flanges;

c. Two molded rubber gaskets; and

d. Sufficient bolts and nuts to properly compress the gaskets.

C. Coupling Size

1. Straight Coupling: Both ends of coupling shall fit outside diameter of piped to be coupled.

2. Transition Couplings: Coupling follower and coupling gasket on one end of coupling shall fit outside diameter of asbestos-cement pipe machined spigot, or outside diameter of plain end steel pipe, as appropriate. Coupling follower and coupling gasket on opposite end of coupling shall fit outside diameter of plain end ductile iron pipe.

D. Middle Rings

1. Material: Ductile Iron.

2. Casting Standard: ASTM A536.

3. Interior of Rings: Smooth without pipe stop.

4. Length

a. Couplings for 3-inch through 12-inch Pipe: 6 inches

b. Couplings for 14-inch and 16-inch Pipe: 7 inches

E. Followers
   1. Type: Single-piece with drilled lugs.
   2. Material: Ductile Iron.
   3. Casting Standard: ASTM A536.
   4. Shape: As required provide positive confinement of gasket.
F. Gaskets for Sleeve-type Couplings
   1. Gaskets shall be EPDM:
G. Bolts and Nuts
   1. Bolts for Sleeve-type Couplings
      a. Type: Track headed.
      b. Material: AISI 316 stainless steel.
      c. Standard: ASTM A193 or ASTM F593
      d. Threads: Rolled thread.
   2. Nuts for Sleeve-type Couplings
      a. Type: Hexagon head
      b. Material: AISI 316 stainless steel
      c. Standard: ASTM A194 or ASTM F594.
      d. Threads: To match bolts.
H. Pipe Preparation for Sleeve-Type Couplings
   1. Pipe End Configuration: Plane ends.
   2. Pipe End Surfaces: Smooth
   3. Length of End Preparation: 12 inches from the ends of the pipe.
   4. Pipe OD Tolerance: Not more than 1/64-inch smaller than the standard outside diameter of the pipe.

2.02 SLEEVE-TYPE, STEEL COUPLINGS (18-INCH THROUGH 48-INCH)

A. Manufacturers and Products
   1. Rockwell (Smith-Blair), Style 411;
   2. Dresser, Style 38;
   3. Ford Meter Box Co., Inc., Style FC1 or FC3;
   4. JCM Industries, Inc., JCM 201;
   5. Or equal straight sleeve type couplings.
B. Coupling Description
   1. Sleeve type couplings for 18-inch through 48-inch pipe shall be steel.
   2. Sleeve-type, steel coupling shall include the following components:

a. One steel middle ring;

b. Two steel follower flanges;

c. Two molded rubber gaskets; and

d. Sufficient bolts and nuts to properly compress the gaskets.

C. Coupling Size: Fit outside diameter of pipe and fittings to be coupled.

D. Middle Rings

1. Interior of Rings: Smooth without pipe stop.

2. Minimum Thickness: Not less than 1/4-inch

3. Length

a. Standard Couplings: 5 inches or 7 inches:

b. Long Sleeve Couplings: 16 inches

4. Tests: Cold-expansion, a minimum of one percent beyond the yield point and air test for porosity.

E. Followers

1. Type: Single-piece contoured mill section welded and cold-expanded as required for the middle rings.

2. Strength: As required to accommodate the number of bolts necessary to obtain adequate gasket pressures without excessive rolling.

3. Shape: As required provide positive confinement of the gasket.

F. Gaskets for Sleeve-type Couplings

1. Gaskets shall be EPDM:

G. Bolts and Nuts

1. Bolts for Sleeve-type Couplings

a. Type: Track headed.

b. Material: AISI 316 stainless steel.

c. Standard: ASTM A193 or ASTM F593

d. Threads: Rolled thread.

2. Nuts for Sleeve-type Couplings

a. Type: Hexagon head

b. Material: AISI 316 stainless steel

c. Standard: ASTM A194 or ASTM F594.

d. Threads: To match bolts.

H. Restrained Joint Sleeve-Type, Steel Couplings

1. Restraint Type: Harness.

2. Standard: Meet the requirements of the appropriate reference standard, or as shown.

I. Pipe Preparation for Sleeve-Type Couplings

1. Pipe End Configuration: Plane ends.
2. Pipe End Surfaces: Smooth
3. Length of End Preparation: 12 inches from the ends of the pipe.
4. Pipe OD Tolerance: Not more than 1/64-inch smaller than the standard outside diameter of the pipe.

2.03 REINFORCED FLEXIBLE PIPE COUPLING (EXPANSION JOINT)

A. Manufacturers and Products

1. Mercer Rubber Company, Flexmore Expansion Joints;
2. Metraflex, Inc. Spool Type Expansion Joint; or
3. Red Valve Company, Inc., Redflex Expansion Joints.

B. Rated Working Pressure: 150 psig.

C. Material

1. Material shall be EPDM, with 1/8-inch hypalon cover:

D. Maximum Temperature Rating

1. EPDM: 250°F

E. Coupling Flanges

1. Type: Integrally molded.
2. Retaining Rings
   a. Type: Split and beveled
   b. Material: AISI 316 stainless steel.
3. Accessories: AISI 316 stainless steel washers at point where retaining rings are split.
4. Flange Bolt Holes and Bolt Circle: Conform to mating flange patterns of connecting piping.

F. Control Units

1. Manufacturer: Same as coupling manufacturer.
2. Requirement: Provide with all flexible pipe couplings.
3. Material: AISI 316 stainless steel.

2.04 FLANGE-MECHANICAL JOINT ADAPTERS

A. Manufacturers and Products

1. Dresser Style 127;
2. Smith-Blair Type 912;
3. Or equal flange-mechanical joint adapters.

B. Working Pressure Rating: 150 psi, minimum.

C. Adapter Material: Cast Iron.

D. Casting Standard: ASTM A126.

E. Flange Joint

1. Flange Standard: ANSI/AWWA C110/A21.10.
2. Dimension Standard for Flange: ANSI B16.1, Class 125.
3. Flange Joint Gasket
   a. Configuration: Solid ring shaped to seal against machined face of pipe, fitting, or valve flange.
   b. Seat: Gasket shall be secured in machined groove in face of adapter flange.
   c. Material
      1) Gaskets shall be EPDM:

F. Mechanical Joint

1. Mechanical Joint Standard: ANSI/AWWA C111/A21.11
2. Mechanical Joint Gasket:
   a. Configuration: Solid ring shaped to seal against pipe when compressed by adapter follower.
   b. Gaskets Standard: ANSI/AWWA C111/A21.11.

G. Bolts and Nuts

1. Bolts for Flange-Mechanical Joint Adapters
   a. Type: Track headed.
   b. Material: AISI 316 stainless steel.
   c. Standard: ASTM A193 or ASTM F593
   d. Threads: Adapter manufacturer's standard.
2. Nuts for Flange-Mechanical Joint Adapters
   a. Type: Hexagon head
   b. Material: AISI 316 stainless steel
   c. Standard: ASTM A194 or ASTM F594.
   d. Threads: To match bolts.

2.05 FLANGE-PLAIN END ADAPTERS

A. Manufacturers and Products

1. The Ford Meter Box Company, Inc., Uni-flange;
2. Or equal

B. Flange-Plain End Adapters for Ductile Iron Pipe

1. Uni-Flange 400 Series (UFA400-C-x series);
2. Or equal.

C. Flange-Plain End Adapters for C900 PVC Pipe (4-inch through 12-inch)

1. Uni-Flange 900 Series (UFA900-C-x series);
2. Or equal.

PART 3 – EXECUTION

3.01 INSTALLATION

A. Install sleeves, adapters, couplings, and appurtenances as specified in this Section and in Section 33 36 13.04 Piping Installation – General.

3.02 JOINING PIPE WITH SLEEVE TYPE COUPLINGS

A. Pipe Preparation for Sleeve Type Couplings

1. Ductile Iron Pipe
   a. Remove lumps, blisters, and excess bituminous coating from plain end of ductile iron pipe and fitting, and wire brush outside of ductile iron pipe.
   b. Length of ductile iron pipe end preparation shall not be less than 12 inches from end of pipe.
   c. Ductile iron pipe OD shall not be more than 1/64-inch smaller than the standard outside diameter of ductile iron pipe.
2. PVC Pipe
   a. Remove dirt, debris, and other deleterious substances from plain end of PVC pipe, and wipe end of pipe dry.
   b. Length of PVC pipe end preparation shall not be less than 12 inches from end of pipe.
   c. PVC pipe OD shall not be more than 1/64-inch smaller than the standard outside diameter of PVC pipe.
3. Asbestos-Cement Pipe Spigot for Asbestos-Cement to Ductile Iron Transition Couplings and for Asbestos-Cement to PVC Transition Couplings
   a. Only connect to machined spigot end of existing asbestos-cement pipe.
   b. Do not connect to existing asbestos-cement pipe barrel.
   c. Remove existing asbestos-cement coupling so that spigot end of asbestos-cement pipe to remain is not nicked, marred, or otherwise damaged.
   d. Clean spigot end of asbestos-cement pipe prior to installation of transition coupling.

B. Cleaning Sleeve Type Couplings

1. Wash and wipe coupling clean of dirt, oil, grease, and other foreign matter.
2. Wipe coupling dry.
3. Wipe each gasket clean of dirt, dust, and other foreign matter.

C. Joining Pipe with Sleeve Type Couplings

1. Brush pipe and gaskets with soapy water.
2. Slip coupling gland on end of each pipe with gland extension toward the end of pipe.
3. Place coupling rubber gasket on end of each pipe with thick edge of gasket toward gland.
4. Place coupling sleeve over the end of one of the pipes being joined.
5. Align ends of pipe being joined.
6. Adjust coupling sleeve and gaskets so that gaskets are equal distance from both pipe ends.
7. Move coupling glands into position against gasket faces.
8. Loosely assemble coupling bolts and nuts.
9. Evenly tighten bolts and nuts.
10. Tighten bolts and nuts so that coupling joints will not leak.
11. Do not over-torque bolts and nuts.
12 Bring pipe and coupling to correct line and grade. Do not exceed deflection limits recommended by coupling manufacturer.
13. Secure buried pipe and couplings with haunching and backfill specified in Section 31 23 43 Pipe Haunching and Backfill.

3.03 REINFORCED FLEXIBLE PIPE COUPLING (EXPANSION JOINT) JOINTS

A. Flange joints for reinforce flexible piping couplings shall meet the requirements of appropriate individual piping material section.

3.04 FLANGE-MECHANICAL JOINT ADAPTER JOINTS

A. Flange joint for flange-mechanical joint adapter shall meet the requirements of appropriate individual piping material section.

B. Mechanical joint for flange-mechanical joint adapter shall meet the requirements of appropriate individual piping material section.

3.05 FLANGE-PLAIN END ADAPTERS

A. Install flange-plain end adapters in accordance with manufacturer's written instructions and as specified in this Article.

B. Flange joint for flange-plain end adapter shall meet the requirements of appropriate individual piping material section.

C. Torques set screws in accordance with adapter manufacturer's written instructions. Set screw torque values shall be in accordance with adapter manufacturer's written instructions.

3.06 MANUFACTURERS' REPRESENTATIVE

A. Provide services of sleeve and adapter manufacturers' representative as required to obtain correct installation of sleeves, adapters, and accessories.

B. Provide assistance of manufacturers' representatives at no additional cost to the Owner.

END OF SECTION 33 11 43.53

SECTION 33 36 43.63

STAINLESS STEEL TAPPING SLEEVES

PART 1 – GENERAL

1.01 SUMMARY

A. Section Includes: Requirements for stainless steel tapping sleeves and accessories.

1.02 REFERENCES

A. General: References to standards, specifications, manuals, or codes of any technical society, organization or association, or to the Laws or Regulations of any government authority, whether such reference be specific or by implication, shall mean the latest standard, specification, manual, code, or Laws or Regulations in effect at the time of opening of Bids (or, on the Effective Date of the Agreement if there were no Bids), except as may be otherwise specifically stated in the Contract Documents.

B. ANSI Standards

1. ANSI B16.5 Pipe Flanges and Flanged Fittings, Steel Nickel Alloy and Other Special Alloys

C. ASTM Standards

1. ASTM A193 Specification for Alloy-Steel and Stainless Steel Nuts for Bolts for High-Pressure and High-Temperature Service
2. ASTM A194 Specification for Carbon and Alloy Steel Nuts for Bolts for High-Pressure and High-Temperature Service
3. ASTM F593 Specification for Stainless Steel Bolts, Hex Cap Screws, and Studs
4. ASTM F594 Specification for Stainless Steel Nuts

D. MSS Standards

1. MSS SP-60 Connecting Flange Joint Between Tapping Sleeves and Tapping Valves

1.03 DEFINITIONS

A. Buried Tapping Sleeves and Valves: Tapping sleeves and valves installed in trenches and covered with soil.

B. Exposed Tapping Sleeves and Valves: Tapping sleeves and valves that are not buried. Exposed tapping sleeves and valves include tapping sleeves and valves outdoors aboveground, tapping sleeves and valves in buildings, tapping sleeves and valves on the interior of tanks, tapping sleeves and valves on the interior of vaults, and tapping sleeves and valves on the interior of pits.

C. Pipe, fittings, tapping sleeves, saddles, and valves sizes and references to pipe diameter on the Drawings and in the Specifications are intended to be nominal size or diameter, and shall be interpreted as nominal size or diameter.

1.04 SUBMITTALS

A. General: As specified in:

1. Section 01 33 00 Submittal Procedures;
2. Section 01 33 23 Shop Drawings, Product Data, and Samples; and
3. This Section.

B. Submittals for tapping sleeves shall include, but not necessarily be limited to, the following:

1. Product data
2. Application for each type of tapping sleeve.

1.05 QUALITY ASSURANCE

A. Marking

1. Mark tapping sleeves and valves.
2. Markings shall meet the requirements of applicable Standards.

B. Factory Tests

1. Test materials used in the manufacture of the tapping sleeves and valves.
2. Tests shall meet the requirements of applicable Specifications and Standards.

C. Field Testing: Field test tapping sleeves and tapping valves as specified in Section 33 36 13.06 Piping Testing.

1.06 DELIVERY, STORAGE, AND HANDLING

A. General

1. Product Delivery: As specified in Section 01 65 00 Product Delivery Requirements.
2. Product Storage and Handling: As specified in Section 01 66 00 Product Storage and Handling.

B. Piping Products

1. Deliver tapping sleeves and accessories in a clean and undamaged condition. Store tapping sleeves and accessories off the ground.
2. Keep interior of tapping sleeves and accessories free from dirt and foreign matter.
3. Store gaskets and other products which will be deteriorated by sunlight in a cool location out of direct sunlight.
4. Gaskets shall not come in contact with petroleum products.
5. Do not stack tapping sleeves.

PART 2 – PRODUCTS

2.01 STAINLESS STEEL TAPPING SLEEVES

A. Manufacturer and Model

1. Ford;
2. JCM-432;
3. Cascade;
4. American;
5. TPS;

B. Type:.....Split sleeve.

C. Branch Connection

1. End Type:.....Flange.
2. Inside Diameter: .....Oversized to permit entry and exit of tapping machine cutters.
3. Flange Recess Standard:..... MSS SP-60.
4. Flange Dimension Standard: .....ANSI B16.5, Class 150.

D. Sleeve Dimensions: Sleeve shall not leak when installed on cast iron, ductile iron, or polyvinyl chloride pipe with outside diameters shown in AWWA standards.

E. Working Pressure: .....200 psi, minimum.

F. Materials for Stainless Steel Tapping Sleeves

1. Sleeve Body:.....AISI 316 Stainless Steel
2. Bolts and Nuts:.....AISI 316 Stainless Steel.
3. Sleeve Gasket Material: Nitrile, Buna-N, or equal synthetic rubber compound resistant to oil, acids, alkalies, wastewater, and water. Gasket hardness shall be as required to provide leak-tight seal when sleeve is properly installed.

G. Sleeve to Pipe Joints for Stainless Steel Tapping Sleeves

1. Type:..... Ring gasket
2. Description: Provide groove in sleeve body around branch outlet with O-ring, wedge, or equal, gasket secured in groove. Gasket shall be compressed between groove and exterior of tapped pipe to provide drip tight seal up to 200 psi internal pressure.

PART 3 – EXECUTION

3.01 INSTALLATION

A. Install tapping sleeves as specified in this Section and Section 33 36 13.04 Piping Installation - General.

B. Install tapping sleeves in accordance with tapping sleeve manufacturer's written instructions.

3.02 MANUFACTURERS' REPRESENTATIVE

A. Provide services of tapping sleeves manufacturer's representatives as required to obtain correct installation of tapping sleeves and accessories.

B. Provide assistance of tapping sleeves manufacturer's representatives at no additional cost to the Owner.

END OF SECTION 33 11 43.63

SECTION 33 36 43.73

STAINLESS STEEL SERVICE SADDLES

PART 1 – GENERAL

1.01 SUMMARY

A. Section Includes: Requirements for stainless steel service saddles for utility pipelines.

1.02 REFERENCES

A. General: References to standards, specifications, manuals, or codes of any technical society, organization or association, or to the Laws or Regulations of any government authority, whether such reference be specific or by implication, shall mean the latest standard, specification, manual, code, or Laws or Regulations in effect at the time of opening of Bids (or, on the Effective Date of the Agreement if there were no Bids), except as may be otherwise specifically stated in the Contract Documents.

B. ANSI/AWWA Standards

1. ANSI/AWWA C800 — Underground Service Line Valves and Fittings

C. ASTM Standards

1. ASTM A193 — Specification for Alloy-Steel and Stainless Steel Nuts for Bolts for High-Pressure and High-Temperature Service
2. ASTM A194 — Specification for Carbon and Alloy Steel Nuts for Bolts for High-Pressure and High-Temperature Service
3. ASTM A240 — Specification for Chromium and Chromium-Nickel Stainless Steel Plate, Sheet, and Strip for Pressure Vessels and for General Applications
4. ASTM A276 — Specification for Stainless Steel Bars and Shapes

1.03 DEFINITIONS

A. Buried Water Service Saddles: Water service saddles installed in trenches and covered with soil.

B. Exposed Water Service Saddles: Water service saddles that are not buried. Exposed water service saddles include water service saddles outdoors aboveground, water service saddles in buildings, water service saddles on the interior of tanks, water service saddles on the interior of vaults, and water service saddles on the interior of pits.

C. Pipe, fittings, tapping sleeves, saddles, and valves sizes and references to pipe diameter on the Drawings and in the Specifications are intended to be nominal size or diameter, and shall be interpreted as nominal size or diameter.

1.04 SUBMITTALS

A. General: As specified in:

1. Section 01 33 00 Submittal Procedures;
2. Section 01 33 23 Shop Drawings, Product Data, and Samples; and
3. This Section.

B. Submittal product data for stainless steel service saddles.

1.05 QUALITY ASSURANCE

A. Field Testing:

1. Field test stainless steel service saddles prior to making tap, as specified in the Section 33 36 13.06 Piping Testing.
2. Field test stainless steel service saddles with piping in which stainless steel service saddles are installed.

1.06 DELIVERY, STORAGE, AND HANDLING

A. General

1. Product Delivery: As specified in Section 01 65 00 Product Delivery Requirements.
2. Product Storage and Handling: As specified in Section 01 66 00 Product Storage and Handling.

B. Piping Products

1. Deliver stainless steel service saddles and accessories in a clean and undamaged condition. Store stainless steel service saddles and accessories off the ground.
2. Keep interior of stainless steel service saddle branch connection free from dirt and foreign matter.
3. Store gaskets and other products which will be deteriorated by sunlight in a cool location out of direct sunlight.
4. Gaskets shall not come in contact with petroleum products.
5. Do not stack water service saddles.

PART 2 – PRODUCTS

2.01 MANUFACTURERS

A. Stainless steel service saddles shall be by one of the following manufacturers unless otherwise designated in Standards, Details, or Specifications published by Owner or in Utility in which the stainless steel service saddles are installed.

1. Smith-Blair;
2. Mueller;
3. Ford;

4. JCM;
5. TPS;

2.02 STAINLESS STEEL SERVICE SADDLES, GENERAL

A. Services saddles shall be as specified in this Section, unless otherwise required by the Owner.

2.03 STAINLESS STEEL SERVICE SADDLES FOR 4-INCH THROUGH 12-INCH PIPE

A. Materials
1. Panel and Lifter Bar:..... AISI Type 316 stainless steel per ASTM A240.
2. Bolts
a. Material: ..... AISI 316 stainless steel.
b. Standard:.....ASTM A193.
3. Nuts
a. Material: ..... AISI 316 stainless steel.
b. Standard:.....ASTM A194.
4. Washers:..... Delrin
5. Lugs: ..... AISI Type 316 stainless steel per ASTM A240.
6. Outlet: ..... AISI Type 316 stainless steel per ASTM A276.
7. Gasket:.....PowerSeal SBR TwinSeal dual o-ring, or equal.

C. Branch Connection
1. Size:.....3/4-inch through 2-inch
2. End Type:..... Threaded female NPT

PART 3 – EXECUTION

3.01 INSTALLATION

A. Install stainless steel service saddles as specified in Section 33 36 13.04 Piping Installation - General.

END OF SECTION 33 36 43.73

SECTION 33 36 53

AIR RELEASE VALVES

PART 1 – GENERAL

1.01 SUMMARY

A. Section Includes

1. Requirements for piping air release valves.
2. Requirements for piping air and vacuum valves.
3. Requirements for piping combination air valves.

1.02 REFERENCES

A. General: References to standards, specifications, manuals, or codes of any technical society, organization or association, or to the Laws or Regulations of any government authority, whether such reference be specific or by implication, shall mean the latest standard, specification, manual, code, or Laws or Regulations in effect at the time of opening of Bids (or, on the Effective Date of the Agreement if there were no Bids), except as may be otherwise specifically stated in the Contract Documents.

B. ANSI Standards

1. ANSI B16.1 Cast Iron Pipe Flanges and Flanged Fittings, Class 25, 125, 250 and 800

C. ASTM Standards

1. ASTM A536 Specification for Ductile Iron Castings
2. ASTM B62 Specification for Composite Bronze or Ounce Metal Casings
3. ASTM B124 Specification for Copper and Copper Alloy Forging Rod, Bar, and Shapes

1.03 DEFINITIONS

A. References to valve sizes on the Drawings and in the Specifications are intended to be nominal size, and shall be interpreted as nominal size.

1.04 SYSTEM DESCRIPTION

A. Functional Requirements of Air Release Valves

1. Air release valve shall continuously vent air pockets as air pockets accumulate in the pipe line.
2. Air release valve shall close and remain closed tight when pressure inside the pipe is less than atmospheric pressure.

B. Functional Requirements of Air and Vacuum Valves

1. Air and vacuum valve shall allow large quantities of air to escape out of the valve orifice when flow through piping is started and shall close tight when water enters valve. Air and vacuum valve shall remain closed tight while water is in valve.

2. Air and vacuum valve shall permit large quantities of air to enter through valve when flow through piping is stopped and shall prevent vacuum from forming in piping.

C. Functional Requirements of Combination Air Valves

1. Combination air valve shall provide the following:

a. An air release component that continuously vents air pockets as air pockets accumulate in the pipe line.

b. An air and vacuum component that exhausts air at high flow rates during piping system filling and admits air at high rate during piping system filling.

2. Combination air valve shall remain closed tight while water is in the valve.

1.05 SUBMITTALS

A. General: As specified in:

1. Section 01 33 00 Submittal Procedures;

2. Section 01 33 23 Shop Drawings, Product Data, and Samples; and

3. This Section.

B. Submit product data for air valves as appropriate to Project requirements.

1.06 QUALITY ASSURANCE

A. Testing: Test valves as specified in this Section.

1.07 DELIVERY, STORAGE, AND HANDLING

A. General

1. Product Delivery: As specified in Section 01 65 00 Product Delivery Requirements.

2. Product Storage and Handling: As specified in Section 01 66 00 Product Storage and Handling.

B. Air Valves

1. Deliver air valves in a clean and undamaged condition. Store air valves off the ground.

2. Keep interior of air valves free from water, dirt, and other foreign matter.

3. Do not stack air valves that are not in their original packaging. Do not stack other products on air valves.

PART 2 – PRODUCTS

2.01 PIPING SYSTEM COMBINATION AIR VALVES, 3/4-INCH THROUGH 2-INCH

A. General

1. Combination air valves shall function as specified in this Section.
2. Combination air valves shall be provided with cover that prevents rain water entering air and vacuum valve.
3. Combination air valves, 3/4-inch through 2-inch, shall be single body type.

B. Combination Air Valve Working Pressure Range: ..... 3 to 230 psi.

C. Combination Air Valve Inlet: ..... Male NPT.

D. Combination Air Valve Outlet: ..... Male NPT.

E. Combination Air Valve Materials

1. Body: ..... Reinforced Nylon.
2. Base: ..... Reinforced Nylon.
3. Discharge Outlet: ..... Polypropylene.
4. Float: ..... Foamed Polypropylene.
5. Clamping Stem: ..... Reinforced Nylon.
6. Seal Plug Assembly
   a. Plug: ..... Reinforced Nylon.
   b. Plug Cover: ..... Reinforced Nylon.
   c. Rolling Seal: ..... EPDM.
   d. Screws: ..... Stainless steel.
7. O-ring: ..... Buna-N.

F. Manufacturer and Model: ..... A.R.I. D-040 / Val Matic / APCO

G. Above-ground Polycarbonate ARV Enclosure……Color: Blue

PART 3 – EXECUTION

3.01 INSTALLATION

A. Air Valves

1. Install air valves in accordance with valve manufacturer's written installation instructions and as shown on the Drawings.
2. Verify valve internal parts operate without restraint.

B. Connecting Piping: Joints for air valve connections to inlet and outlet piping shall be as specified in the appropriate individual piping material Section.

3.02 TESTING

A. Hydraulic Test: Perform hydraulic test with piping in which air valves are installed.

B. Functional Test: Demonstrate air valve operation.

3.03 MANUFACTURERS' REPRESENTATIVE

A. Provide services of air valve manufacturer's representative as required to obtain correct installation of valves and accessories.

B. Provide assistance of air valve manufacturer's representatives at no additional cost to the Owner.

END OF SECTION 33 36 53

CITY OF NORTH PORT
BRIDGE WATER PIPELINE REPLACEMENT N CRANBERRY BLVD. AT SNOVER WATER WAY

CITY OF NORTH PORT CONTRACT 2018-05

BOARD OF CITY COMMISSIONERS

Vanessa Carusone – SEAT #1 – MAYOR
Christopher Hanks – SEAT #2 – COMMISSIONER
Debbie McDowell – SEAT #3 – COMMISSIONER
Jill Luke – SEAT #4 – COMMISSIONER
Linda Yates – SEAT #5 – VICE-MAYOR

CITY MANAGER
PETER LEAR

DIRECTOR OF UTILITIES
RICK NEWKIRK

DRAWING INDEX

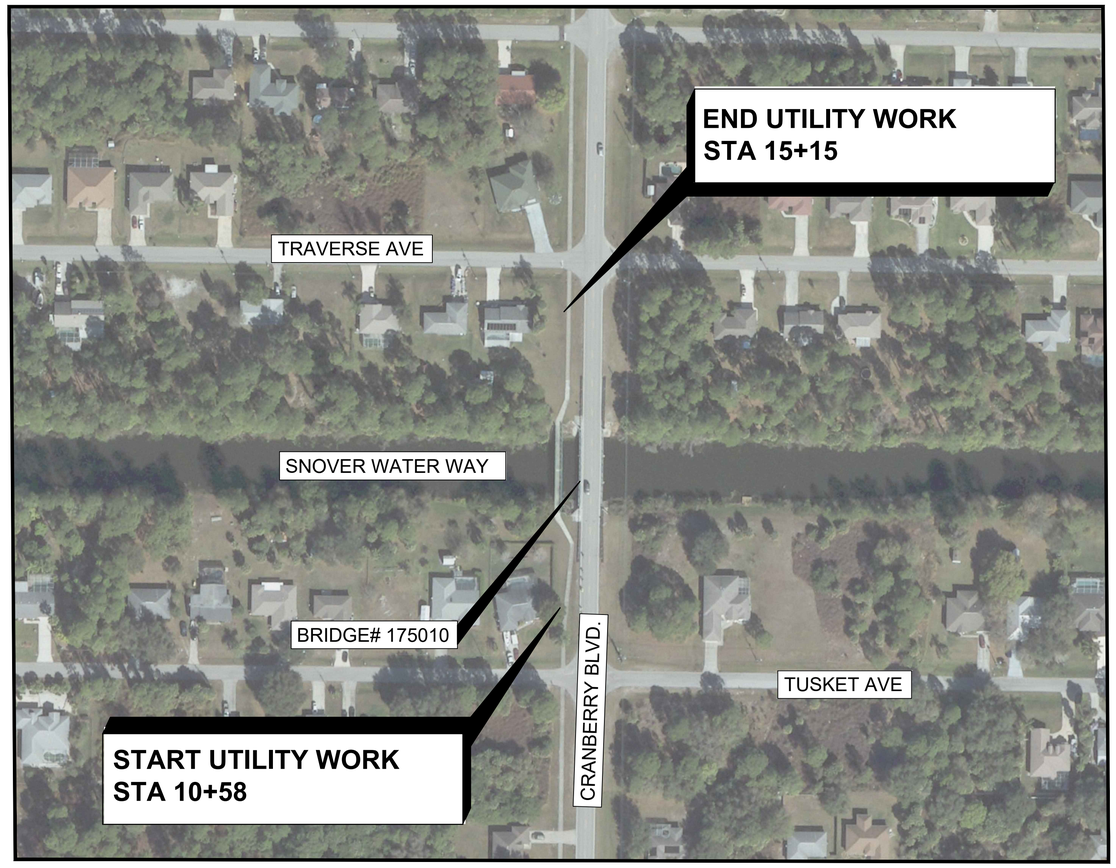

LOCATION MAP

AUGUST 2018

ISSUED FOR PERMITTING

TKW CONSULTING ENGINEERS
5621 Banner Drive
Fort Myers, Florida 33912
TEL: 239.278.1992 • FAX: 239.278.0922
E-MAIL: info@tkwonline.com
Engineering Certification # 5762

Douglas H. Eckmann, PE Date
Florida Registration No. 47259

ABBREVIATIONS

ABD.	ABANDONED
AC.	ACRE
ALT.	ALTERNATE
AL.	ALUMINUM
ANSI	AMERICAN NATIONAL STANDARDS INSTITUTE
APPROX.	APPROXIMATE
ARV	AIR RELEASE VALVE
ASPH.	ASPHALT
ASSEM.	ASSEMBLY
ASTM	AMERICAN SOCIETY FOR TESTING MATERIALS
AVE	AVENUE
AWWA	AMERICAN WATER WORKS ASSOCIATION
BEG.	BEGIN
BFP	BACKFLOW PREVENTION DEVICE
BLDG.	BUILDING
BLVD.	BOULEVARD
BM	BENCH MARK
BOT.	BOTTOM
BO	BLOW OFF
BTFLY.	BUTTERFLY
CATV	CABLE TELEVISION
CB	CATCH BASIN
C/C	CENTER TO CENTER
CF	CUBIC FOOT
CI	CAST IRON
CL	CENTER LINE
CMP	CORRUGATED METAL PIPE
CO	CLEAN OUT
CONC.	CONCRETE
COR.	CORNER
CORP.	CORPORATION
CT	COURT
DIA.	DIAMETER
DIM.	DIMENSION
DIP	DUCTILE IRON PIPE
DR	DRIVE
DRIVE	DRIVEWAY
DWG.	DRAWING
E	EAST
EL.	ELEVATION
ELEC.	ELECTRICAL
ELEV.	ELEVATION
EOP	EDGE OF PAVEMENT
ERCP	ELLIPTICAL REINFORCED CONCRETE PIPE
EW	EACH WAY
EX.	EXISTING
EXC.	EXCAVATION
EXIST.	EXISTING
FAC	FLORIDA ADMINISTRATIVE CODE
FDOT	FLORIDA DEPARTMENT OF TRANSPORTATION
FH	FIRE HYDRANT
FL.	FLORIDA
FLG.	FLANGED
FM	FIBER OPTIC CABLE
FOC	FORCE MAIN
FT	FOOT
GAL.	GALLON
GALV.	GALVANIZED
GM	GAS MAIN
GV	GATE VALVE
HDPE	HIGH DENSITY POLYETHYLENE
I.E.	INVERT ELEVATION
IN.	INCH
INC.	INCORPORATED
INV	INVERT
IRR.	IRRIGATION LINE
JB	JUNCTION BOX
LB.	POUND
LBR	LIMEROCK BEARING RATIO
LCU	LEE COUNTY UTILITIES
LF	LINEAR FOOT
LT	LEFT
MAX.	MAXIMUM
MH	MANHOLE
MIN.	MINIMUM
MISC.	MISCELLANEOUS
MJ	MECHANICAL JOINT
MOD.	MODIFIED
N	NORTH
NE	NORTHEAST
NGVD	NATIONAL GEODETIC VERTICAL DATUM
NLY.	NORTHERLY
NO.	NUMBER
NPT	NATIONAL PIPE THREAD
NW	NORTHWEST
OC	ON CENTERS
O/E	OR EQUAL
O/O	OUTSIDE TO OUTSIDE
PAVT.	PAVEMENT
PEN.	PENETRATION
PI	POINT OF INTERSECTION
PL	PLACE
P/L	PROPERTY LINE
PS	PUMP STATION
PSI	POUNDS PER SQUARE INCH
PT	POINT OF TANGENCY
PT	POWER TRANSFORMER
PVC	POLYVINYL CHLORIDE
PUE	PUBLIC UTILITY EASEMENT
PW	POTABLE WATER
R.	RADIUS
RCP	REINFORCED CONCRETE PIPE
RCW	RECLAIMED WATER
RDWY.	ROADWAY
RED.	REDUCER
REF.	REFERENCE
REINF.	REINFORCED
RELOC.	RELOCATION
REM.	REMOVAL
REPL.	REPLACE
REQ.	REQUIRED
RJ	RESTRAINED JOINT
RMJ	RESTRAINED MECHANICAL JOINT
ROW	RIGHT OF WAY
RT	RIGHT
R/W	RIGHT OF WAY
S	SOUTH
SAN.	SANITARY
SEW.	SEWER
SCH.	SCHEDULE
SD	STORM DRAIN
SDR	STANDARD DIMENSIONAL RATIO
SE	SOUTHEAST
SECT.	SECTION
SHLDR.	SHOULDER
SLY.	SOUTHERLY
SPEC.	SPECIFICATION
SQ. FT.	SQUARE FOOT
SQ. IN.	SQUARE INCH
SS	STAINLESS STEEL
SSW	SOLVENT WELDED
ST.	STREET
STA.	STATION
STD.	STANDARD
SW	SOUTHWEST
SW	SECONDARY WATER
TB	TELEPHONE BOX
TEL.	TELEPHONE
TYP.	TYPICAL
USF	UNITED STATES FOUNDRY
UTIL.	UTILITIES
VAR.	VARIES
VCP	VITRIFIED CLAY PIPE
VOL.	VOLUME
W	WEST
W/	WITH
WLD	WELDED
WM	WATER MAIN
XSEC	CROSS SECTION

LEGEND

- BENCHMARK
- EXISTING ELECTRICAL MANHOLE
- EXISTING TELEPHONE MANHOLE
- EXISTING GUY ANCHOR
- EXISTING WOODEN POWER POLE
- EXISTING LIGHT POLE
- EXISTING CONCRETE POWER POLE
- EXISTING CATCH BASIN
- EXISTING DRAINAGE MANHOLE
- EXISTING BACKFLOW PREVENTOR
- WV EXISTING WATER VALVE
- EXISTING FIRE HYDRANT
- FIRE HYDRANT ASSEMBLY
- SV EXISTING SEWER VALVE
- EXISTING SEWER MANHOLE
- EXISTING PLUG VALVE
- EXISTING AIR RELEASE VALVE
- AIR RELEASE VALVE
- GATE VALVE
- SB SOIL BORING LOCATION
- AIR RELEASE VALVE (PROFILE)
- CO EXISTING CLEAN OUT

	EXISTING EASEMENT LINE
R/W	EXISTING RIGHT-OF-WAY LINE
	EXISTING PROPERTY LINE
rcw	EXISTING RECLAIM WATER MAIN
FM	EXISTING FORCE MAIN
WM	EXISTING WATER MAIN
SS	EXISTING SANITARY SEWER
BTV	EXISTING BURIED CABLE TV
BE	EXISTING BURIED ELECTRIC
oel	EXISTING OVERHEAD ELECTRIC
BT	EXISTING BURIED TELEPHONE CABLE
light	EXISTING STREET LIGHTING
GAS	EXISTING GAS MAIN
	EXISTING FENCE LINE
BFO	EXISTING BURIED FIBER OPTIC
WM	PROPOSED WATER MAIN
FM	PROPOSED FORCE MAIN

TKW CONSULTING ENGINEERS®
5621 Banner Drive
Fort Myers, Florida 33912
TEL: 239.278.1992 • FAX: 239.278.0922
E-MAIL: info@tkwonline.com
Engineering Certification # 5762

Consultant

Owner

NorthPort FLORIDA
CITY OF NORTH PORT UTILITIES

Project

CITY OF NORTH PORT BRIDGE WATER PIPELINE REPLACEMENT

Issued For

PERMITTING

Issued On: AUGUST 2018

Revisions

REV. NO.	DATE	DESCRIPTION
△		
△		
△		
△		
△		

0 1/2 1
BAR MEASURES 1 INCH ON FULL SIZE DRAWING

Engineer

Douglas H. Eckmann, PE Date
Florida Registration No. 47259

Drawing Data

SCALE: AS SHOWN
DRAWN BY: SMR
CHECKED BY: DHE

Drawing Title

LEGEND, SYMBOLS & ABBREVIATIONS

Drawing Number

G001

SHEET 02 OF 08

TKW Project No.: 16919.07

Plotted By: Maureen Tomlinson
Layout: G001
Plot Style Table: TKW-EnvEng-Civil.stb
Printer/Plotter Name: HP LaserJet 5000 Series PCL
Page Setup Name: ----
Plotted: 8/8/2018
Plotted Drawing Path and Name: P:\Envir Engin\Clients\City of North Port Bridge Water Pipeline Replacement N Cranberry Blvd. 16919-07 dwg\02-Plan Set\G001.dwg

GENERAL NOTES

1. THESE PLANS ARE SOLELY TO ASSIST THE CONTRACTOR IN ASSESSING THE NATURE AND EXTENT OF THE EXISTING CONDITIONS WHICH MAY BE ENCOUNTERED DURING THE COURSE OF WORK. CONTRACTORS ARE DIRECTED TO CONDUCT WHATEVER INVESTIGATION THEY DEEM NECESSARY PRIOR TO BIDDING TO DETERMINE THE ACTUAL CONDITIONS THAT WILL BE ENCOUNTERED.
2. LOCATIONS, ELEVATIONS AND DIMENSIONS OF EXISTING UTILITIES, STRUCTURES, AND OTHER FEATURES ARE SHOWN BASED ON SURVEY BY BANKS ENGINEERING DATED 5-21-18. BENCHMARKS AND ELEVATIONS SHOWN ON PLANS ARE NORTH AMERICAN VERTICAL DATUM OF 1988 (NAVD '88) WITH A CONVERSION FACTOR OF -1.125' (NGVD 29 - 1.125' = NAVD 88). THE CONTRACTOR SHALL VERIFY, PRIOR TO CONSTRUCTION, THE LOCATIONS. ELEVATIONS, AND DIMENSIONS OF ALL EXISTING UTILITIES, STRUCTURES. AND OTHER FEATURES (WHETHER OR NOT SHOWN ON THE PLANS) AFFECTING HIS WORK.
3. THE CONTRACTOR SHALL REVIEW AND VERIFY ALL DIMENSIONS ON THE PLANS AND REVIEW ALL FIELD CONDITIONS THAT MAY AFFECT CONSTRUCTION. SHOULD DISCREPANCIES OCCUR, THE CONTRACTOR SHALL NOTIFY THE ENGINEER TO OBTAIN WRITTEN CLARIFICATION BEFORE COMMENCING WITH CONSTRUCTION.
4. THE CONTRACTOR SHALL PROTECT ALL EXISTING STRUCTURES. STORM DRAINS, SEWERS, WATER MAINS, UTILITIES, AND OTHER FACILITIES IN THE CONSTRUCTION AREA. THE CONTRACTOR SHALL REPAIR ANY DAMAGES DUE TO HIS CONSTRUCTION ACTIVITIES AT NO ADDITIONAL COST TO THE OWNER.
5. WHERE IT IS NECESSARY TO DEFLECT PIPE EITHER HORIZONTALLY OR VERTICALLY. PIPE JOINT DEFLECTION SHALL NOT EXCEED 75% OF THE MANUFACTURERS' MAXIMUM RECOMMENDED DEFLECTION.
6. THE CONTRACTOR SHALL PROVIDE CERTIFIED RECORD DRAWINGS AS OUTLINED IN THE SPECIFICATIONS. RED-LINE DRAWINGS SHALL BE CURRENT WITH EACH PAY APPLICATION SUBMITTED AND WILL BE CHECKED AS PART OF THE PAY APPLICATION REVIEW PROCESS. PAYMENT WILL NOT BE MADE TO CONTRACTOR WITHOUT APPROVED RED-LINE DRAWINGS.
7. THE CONTRACTOR SHALL PROVIDE THE OWNER WITH A DETAILED CONSTRUCTION PHASING PLAN FOR APPROVAL, PRIOR TO BEGINNING CONSTRUCTION. FIELD CONDITIONS MAY NECESSITATE ALIGNMENT AND GRADE DEVIATION OF THE PROPOSED PIPELINE TO AVOID CONFLICTS. NO ADDITIONAL PAYMENT SHALL BE MADE WITHOUT PRIOR APPROVAL OF THE OWNER AND THE OWNER'S ENGINEER.
8. ALL PROPOSED WORK WHICH IMPACTS NPU POTABLE WATER OR WASTEWATER SERVICES OR OPERATIONS SHALL BE COORDINATED WITH NPU FIELD OPERATIONS PERSONNEL AND THE CITY OF NORTH PORT UTILITIES DEPARTMENT AT LEAST TWO WEEKS IN ADVANCE OF PROPOSED CONSTRUCTION.
9. THE CONTRACTOR SHALL FURNISH SHOP DRAWINGS TO THE ENGINEER FOR APPROVAL OF ALL PIPE, HDD WIRELINE TRACKING SYSTEM, PIPE CONNECTIONS, TRANSITIONS, AND SPECIALS PRIOR TO FABRICATION OR DELIVERY TO THE JOB SITE.
10. CONNECTIONS TO EXISTING FACILITIES SHALL BE ACCOMPLISHED IN A NEAT WORKMANLIKE MANNER. WHEN FIELD CONDITIONS INDICATE ANY VARIANCE FROM DETAILED METHODS, THE CONTRACTOR SHALL PROVIDE COMPREHENSIVE AND DETAILED DRAWINGS FOR OWNER & ENGINEER REVIEW AND APPROVAL PRIOR TO MAKING THE CONNECTIONS.
11. ALL PIPELINES SHALL HAVE A MINIMUM COVER OF 36" BELOW EXISTING GRADE UNLESS OTHERWISE NOTED OR DIRECTED. WHERE NOT INDICATED ON THE PLANS PIPELINES SHALL BE LAID TO AVOID CONFLICTS WITH OTHER PIPELINES AND BE IN ACCORDANCE WITH FDEP REQUIREMENTS. SANITARY SEWERS AND FORCE MAINS CROSSING OVER OR UNDER WATER MAINS SHALL BE LAID TO PROVIDE A MINIMUM VERTICAL DISTANCE OF 12" BETWEEN THE INVERT OF THE UPPER PIPE AND THE CROWN OF THE LOWER PIPE, AND IN ACCORDANCE WITH FDEP SEPARATION REQUIREMENTS. AS AN ALTERNATE, THE SEWER OR FORCE MAIN MAY BE PLACED IN A WATERTIGHT CASING PIPE.
12. WATER SHALL NOT BE PERMITTED IN TRENCHES DURING CONSTRUCTION, DEWATERING IS REQUIRED TO A MINIMUM OF 18" BELOW BOTTOM OF EXCAVATION.
13. THE CONTRACTOR SHALL NOT ALLOW ANY DISCHARGE OF WASTEWATER TO LANDS AND/OR ADJACENT WATER BODIES OR STORM DRAINS. ANY LEAKAGE: MUST BE CONTAINED AND TRANSFERRED BY THE CONTRACTOR TO THE WASTEWATER PUMP STATION AT THE WATER TREATMENT PLANT.
14. ALL EXPOSED DUCTILE IRON AND BLACK CARBON STEEL PIPING SHALL BE PAINTED WITH DESIGNATED COLORS ASSOCIATED WITH THEIR USAGE AS PROVIDED IN THE SPECIFICATIONS. STAINLESS STEEL, FRP AND PVC PIPE MAY BE IDENTIFIED USING ADHESIVE LABELS IN LIEU OF PAINTING. DUCTILE IRON AND BLACK CARBON STEEL PIPE SHALL ALSO BE IDENTIFIED USING ADHESIVE LABELS.
15. ALL NEW PIPELINES SHALL BE FLUSHED, PRESSURE TESTED, AND APPROVED PRIOR TO TIE-INS TO EXISTING FACILITIES. THE CONTRACTOR WILL BE ALLOWED TO USE TEMPORARY PLUGS FOR PRESSURE TESTING.
16. ALL BURIED PIPES SHALL HAVE PROPER IDENTIFICATION LOCATING TAPE INSTALLED AT 1 FOOT BELOW FINISHED GRADE, OVER THE CENTERLINE OF THE PIPE AND SIZE 12 TRACER WIRE INSTALLED DIRECTLY OVER THE TOP OF ALL PIPES INSTALLED (NOT MORE THAN 6" ABOVE TOP OF PIPE). THE TRACER WIRE SHALL BE BROUGHT UP TO EVERY VALVE BOX.
17. ALL CONCRETE THRUST BLOCKS INSTALLED FOR TESTING PURPOSES AND NOT REQUIRED FOR THE PIPELINE SHALL BE REMOVED AND DISPOSED OF BY THE CONTRACTOR PRIOR TO FINAL ACCEPTANCE.
18. CONTRACTOR SHALL PROVIDE PROTECTIVE MATTING, FUEL CONTAINMENT AND ALL OTHER MATERIALS, EQUIPMENT AND LABOR TO PROTECT THE STAGING AREA DURING CONSTRUCTION.
19. CONTRACTOR SHALL, PRIOR TO BEGINNING CONSTRUCTION, SUBMIT A "FUELING SPILL PREVENTION PLAN" THAT SHALL CLEARLY INDICATE HOW FUEL SPILLS WILL BE PREVENTED WHEN FUELING BOTH WITHIN AND OUTSIDE OF THE STAGING AREA.
20. CONTRACTOR SHALL SUBMIT A DEWATERING PLAN FOR APPROVAL PRIOR TO BEGINNING CONSTRUCTION. DEWATERING SHALL BE CONDUCTED IN ACCORDANCE WITH THE BMPS IDENTIFIED IN CHAPTER 4, 4.40 "DEWATERING" OF "THE FLORIDA STORMWATER EROSION AND SEDIMENTATION CONTROL INSPECTOR'S MANUAL".
21. THE CONTRACTOR MUST PULL A RIGHT-OF-WAY PERMIT FROM THE CITY OF NORTH PORT PRIOR TO THE START OF ANY WORK.
22. ALL AREAS DISTURBED BY THE CONSTRUCTION MUST BE RESTORED TO SIMILAR OR BETTER CONDITIONS.

RESTORATION AND BMP NOTES

1. THE CONTRACTOR SHALL PROVIDE AN ASPHALT PATCH FOR TRENCH AREAS CONSTRUCTED IN EXISTING ROADWAYS AND ACCESS DRIVES. ADJUST ALL CASTINGS TO MATCH NEW PAVEMENT SURFACE.
2. THE CONTRACTOR SHALL REPLACE ALL EXISTING PAVING, STABILIZED EARTH, CURBS, SIDEWALKS, FENCES, LANDSCAPING AND OTHER IMPROVEMENTS WITH THE SAME OR BETTER TYPE OF MATERIAL THAT WAS REMOVED DURING CONSTRUCTION OR AS DIRECTED BY THE ENGINEER AND PER THE CITY OF NORTH PORT ROADWAY STANDARDS.
3. ALL RESTORATION WORK PERFORMED THROUGHOUT THE PROJECT SHALL CONFORM TO EXISTING LINES AND GRADES UNLESS OTHERWISE NOTED.
4. ALL EXISTING FENCES DISTURBED DURING CONSTRUCTION SHALL BE REPLACED AND REINSTALLED BY THE CONTRACTOR AT NO ADDITIONAL COST TO THE OWNER UNLESS SHOWN TO BE REMOVED ON CONSTRUCTION PLANS.
5. CONTRACTOR SHALL RESTORE ALL IRRIGATION SYSTEM COMPONENTS TO PRE-CONSTRUCTION CONDITIONS.
6. ALL DISTURBED GRASS AREAS SHALL BE RESTORED WITH SOLID SOD IN LIKE KIND UNLESS OTHERWISE DIRECTED BY ·OWNER.
7. CONTRACTOR IS RESPONSIBLE FOR COORDINATING WITH THE CITY FOR DISPOSAL OF EQUIPMENT AND / OR MATERIAL TO BE DEMOLISHED AND/OR REMOVED. REFER TO TECHNICAL SPECIFICATIONS.
8. THE PROJECT SHALL COMPLY WITH APPLICABLE STATE WATER QUALITY STANDARDS. BEST MANAGEMENT PRACTICES FOR EROSION CONTROL SHALL BE IMPLEMENTED AND MAINTAINED AT ALL TIMES TO PREVENT SILTATION AND TURBID DISCHARGES IN EXCESS OF STATE WATER QUALITY STANDARDS, PURSUANT TO RULE 62-302, F.A.C. METHODS SHALL INCLUDE, BUT ARE NOT LIMITED TO THE IMMEDIATE PLACEMENT OF TURBIDITY CONTAINMENT DEVICES SUCH AS TURBIDITY SCREENS, SILT CONTAINMENT FENCES, HAY BALES, AND EARTHEN BERMS, ETC. TO CONTAIN THE DRILLING MUD. TURBIDITY BARRIERS SHALL REMAIN IN PLACE AT ALL LOCATIONS UNTIL CONSTRUCTION IS COMPLETED AND SOILS ARE STABILIZED PER THE APPROVED SWFWMD ERP PERMIT, CONTRACTOR SHALL CONTAIN AND DISPOSE OF ALL MUD FLUID AND SPOILS AND SHALL FOLLOW ALL ENVIRONMENTAL PROTECTION PROVISIONS AND STIPULATIONS DETAILED IN THE APPROVED FRAC-OUT PLAN.
9. CONTRACTOR SHALL MAINTAIN A CLEAR PATH FOR ALL SURFACE WATER DRAINAGE STRUCTURES AND DITCHES DURING ALL PHASES OF CONSTRUCTION. THE CONTRACTOR SHALL BE REQUIRED TO INSTALL ALL EROSION, SEDIMENT AND TURBIDITY CONTROL MEASURES PRIOR TO CONSTRUCTION OF ANY COMPONENTS ASSOCIATED WITH THE PROJECT. SEDIMENT CONTROL INCLUDES SILT DAMS, TRAPS, EROSION PROTECTION, AND ANY OTHER APPURTENANCES NEEDED BUT NOT NECESSARILY SHOWN ON THESE DRAWINGS. THE CONTRACTOR SHALL ENSURE THAT ALL DRAINAGE CONVEYANCES ADJACENT TO THE BORE PITS ARE NOT OBSTRUCTED AND IN NO WAY ALTERED BY THE PROJECT.
10. ALL WORK SHALL BE DONE FROM AND WITHIN THE UPLANDS WITH NO IMPACTS TO THE WETLANDS OR SURFACE WATERS AND IN ACCORDANCE WITH THE APPROVED SWFWMD ERP PERMIT.

UTILITY NOTES

1. THE CONTRACTOR SHALL BE RESPONSIBLE FOR COORDINATING WITH THE FOLLOWING JURISDICTIONAL BODIES AND UTILITY COMPANIES:

CITY OF NORTH PORT UTILITIES	FLORIDA POWER & LIGHT	FRONTIER COMMUNICATIONS.
DARRELL SMITH	TRACY STERN	DENISE HUTTON
6644 W. PRICE BLVD	303 HASTINGS RD.	13715 TAMIAMI TRAIL
NORTH PORT, FL 34291	ST. AUGUSTINE, FL 32084	NORTH PORT, FL 34287
(941) 240-8021	(800) 868-9554	(941)777-0607
HERITAGE PROPANE PRTNRS/DBA HORIZON GAS	TECO-PEOPLES GAS	COMCAST CABLEVISION OF WEST FLORIDA
MICHAEL WARNER	DANNY SHANAHAN	GONZALO ROJAS
13325A TAMIAMI TRAIL	8261 VICO CT	5205 FRUITVILLE RD
NORTH PORT, FL 34287	SARASOTA, FL 34240	SARASOTA, FL 34232
(941) 423-8303	(941) 342-4006	(941) 342-3578

2. ALL UTILITY CONSTRUCTION SHALL BE IN CONFORMANCE WITH THE LATEST VERSION OF THE CITY OF NORTH PORT UTILITIES STANDARDS.
3. ALL BELOW GROUND DUCTILE IRON PIPE SHALL BE ENCASED IN A POLYETHYLENE WRAP IN ACCORDANCE WITH AWWA STANDARDS.
4. ALL VALVE BOX COVERS SHALL BE PAINTED TO INDICATE THEIR TYPE OF SERVICE.
5. ALL TEST POINT TAPPING SHALL BE CUT LOOSE FROM THE CORPORATION STOP AND COMPLETELY REMOVED AND DISPOSED OF BY THE CONTRACTOR PRIOR TO FINAL ACCEPTANCE. THE CORPORATION STOP SHALL BE CAPPED AND REMAIN IN PLACE.

TKW CONSULTING ENGINEERS
5621 Banner Drive
Fort Myers, Florida 33912
TEL: 239.278.1992 • FAX: 239.278.0922
E-MAIL: info@tkwonline.com
Engineering Certification # 5762

Consultant

Owner

NorthPort FLORIDA
CITY OF NORTH PORT UTILITIES

Project

CITY OF NORTH PORT BRIDGE WATER PIPELINE REPLACEMENT

Issued For

PERMITTING

Issued On: AUGUST 2018

Revisions

REV. NO.	DATE	DESCRIPTION

0 1/2 1
BAR MEASURES 1 INCH ON FULL SIZE DRAWING

Engineer

Douglas H. Eckmann, PE **Date**
Florida Registration No. 47259

Drawing Data

SCALE: AS SHOWN
DRAWN BY: SMR
CHECKED BY: DHE

Drawing Title

GENERAL NOTES

Drawing Number

G002

SHEET 03 OF 08

TKW Project No.: 16919.07

Plotted: 8/8/2018 | Page Setup Name: ---- | Printer/Plotter Name: HP LaserJet 5000 Series PCL | Plot Style Table: TKW-EnvEng-Civil.stb | Plotted By: Maureen Tomlinson
Plotted Drawing Path and Name: P:\Envir Engin\Clients\City of North Port Bridge Water Pipeline Replacement N Cranberry Blvd. 16919-07 dwg\02-Plan Set\G002.dwg | Layout: G002

REMOVE ALL EXISTING EXPOSED STEEL PIPE
AND STEEL PIPE SUPPORT HARDWARE

CUT EXISTING EXPOSED 12" STEEL PIPE
FLUSH WITH BRIDGE ABUTMENT AT BOTH ENDS & PLUG
UPON VISUAL EVIDENCE OF FLOWABLE FILL

EXISTING STEEL PIPE
TO BE REMOVED

EXISTING STEEL PIPE
TO BE REMOVED

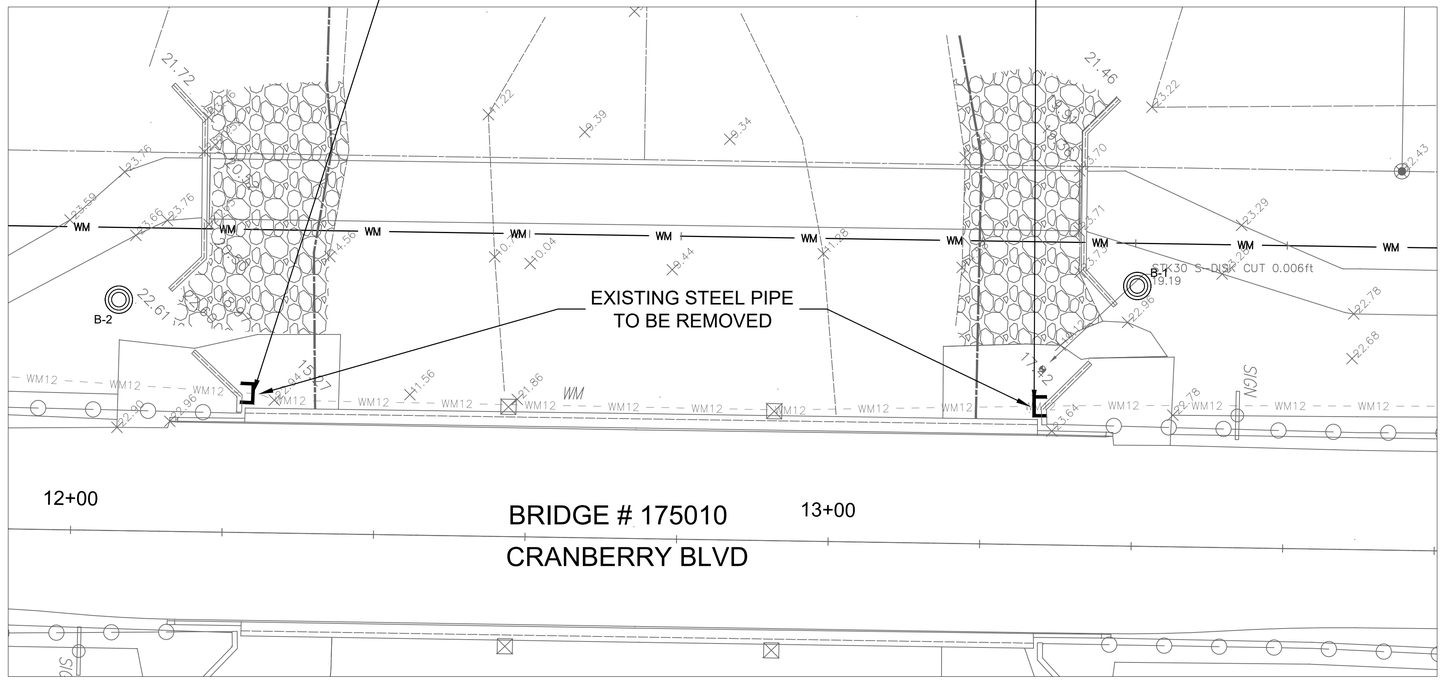

PLAN VIEW
SCALE: 1" = 10'

NOTE:
THE ELEVATIONS ON THIS DRAWING ARE BASED ON NORTH AMERICAN VERTICAL DATUM OF 1988 (NAVD88). NGVD29 = NAVD88 + 1.125FT. AT THIS LOCATION

0 10 20 Feet

TKW CONSULTING ENGINEERS
5621 Banner Drive
Fort Myers, Florida 33912
TEL: 239.278.1992 • FAX: 239.278.0922
E-MAIL: info@tkwonline.com
Engineering Certification # 5762

Consultant

Owner

NorthPort FLORIDA
CITY OF NORTH PORT UTILITIES

Project

CITY OF NORTH PORT BRIDGE WATER PIPELINE REPLACEMENT

Issued For

PERMITTING

Issued On: AUGUST 2018

Revisions

REV. NO.	DATE	DESCRIPTION
△		
△		
△		
△		
△		

0 1/2 1
BAR MEASURES 1 INCH ON FULL SIZE DRAWING

Engineer

Douglas H. Eckmann, PE Date
Florida Registration No. 47259

Drawing Data

SCALE: AS SHOWN
DRAWN BY: SMR
CHECKED BY: DHE

Drawing Title

DEMOLITION OF BRIDGE MOUNTED WATER MAIN

Drawing Number

G003

SHEET 04 OF 08

TKW Project No.: 16919.07

Plotted By: Maureen Tomlinson
Layout: G003
Plot Style Table: TKW-EnvEng-Civil.stb
Printer/Plotter Name: HP LaserJet 5000 Series PCL
Page Setup Name: ----
Plotted: 8/8/2018
Plotted Drawing Path and Name: P:\Envir Engin\Clients\City of North Port Bridge Water Pipeline Replacement N Cranberry Blvd. 16919-07 dwg\02-Plan Set\G003.dwg

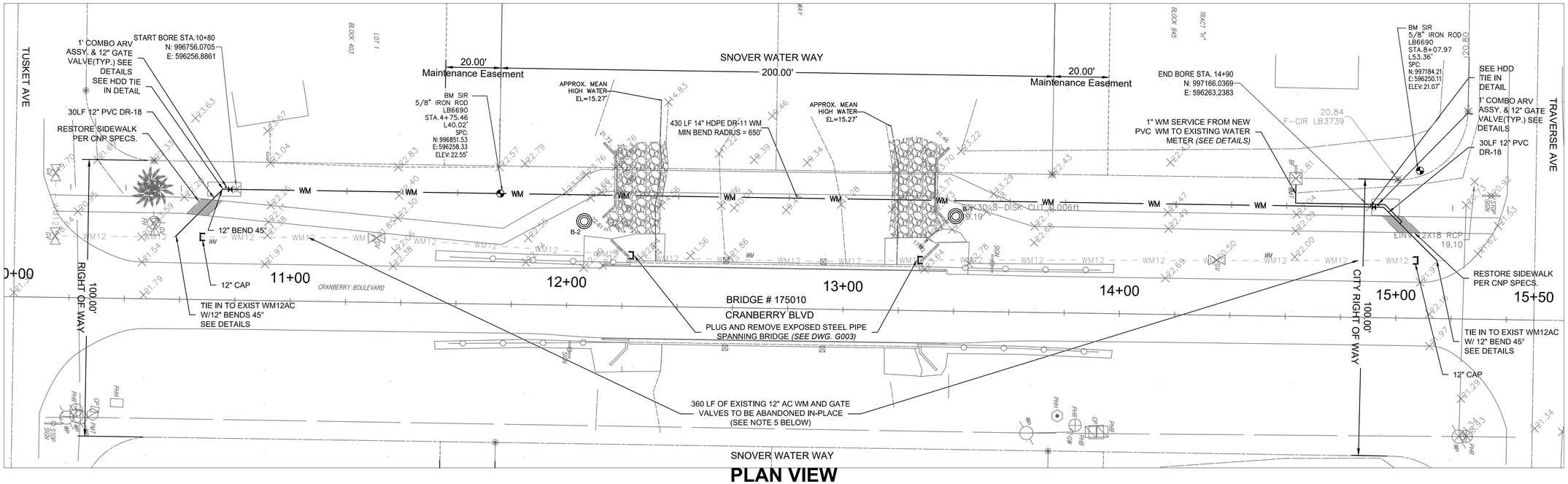

PLAN VIEW

SCALE: 1" = 20'

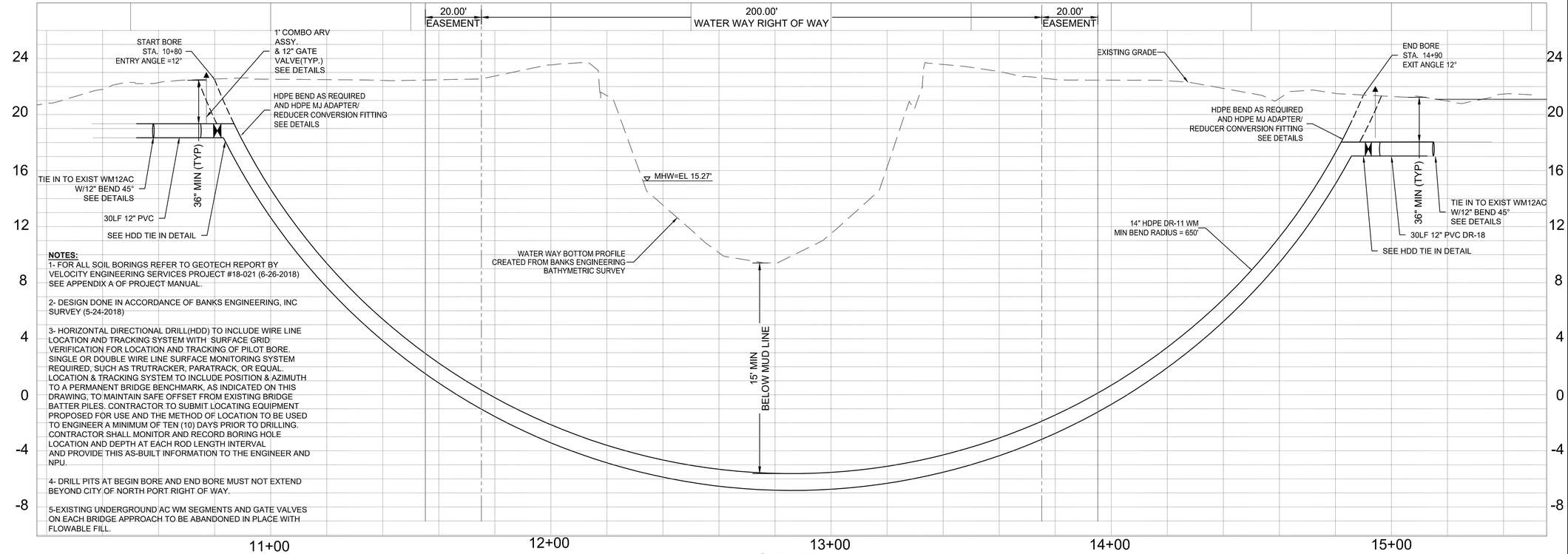

NOTES:

1- FOR ALL SOIL BORINGS REFER TO GEOTECH REPORT BY VELOCITY ENGINEERING SERVICES PROJECT #18-021 (6-26-2018) SEE APPENDIX A OF PROJECT MANUAL.

2- DESIGN DONE IN ACCORDANCE OF BANKS ENGINEERING, INC SURVEY (5-24-2018)

3- HORIZONTAL DIRECTIONAL DRILL(HDD) TO INCLUDE WIRE LINE LOCATION AND TRACKING SYSTEM WITH SURFACE GRID VERIFICATION FOR LOCATION AND TRACKING OF PILOT BORE. SINGLE OR DOUBLE WIRE LINE SURFACE MONITORING SYSTEM REQUIRED, SUCH AS TRUTRACKER, PARATRACK, OR EQUAL. LOCATION & TRACKING SYSTEM TO INCLUDE POSITION & AZIMUTH TO A PERMANENT BRIDGE BENCHMARK, AS INDICATED ON THIS DRAWING, TO MAINTAIN SAFE OFFSET FROM EXISTING BRIDGE BATTER PILES. CONTRACTOR TO SUBMIT LOCATING EQUIPMENT PROPOSED FOR USE AND THE METHOD OF LOCATION TO BE USED TO ENGINEER A MINIMUM OF TEN (10) DAYS PRIOR TO DRILLING. CONTRACTOR SHALL MONITOR AND RECORD BORING HOLE LOCATION AND DEPTH AT EACH ROD LENGTH INTERVAL AND PROVIDE THIS AS-BUILT INFORMATION TO THE ENGINEER AND NPU.

4- DRILL PITS AT BEGIN BORE AND END BORE MUST NOT EXTEND BEYOND CITY OF NORTH PORT RIGHT OF WAY.

5-EXISTING UNDERGROUND AC WM SEGMENTS AND GATE VALVES ON EACH BRIDGE APPROACH TO BE ABANDONED IN PLACE WITH FLOWABLE FILL.

PROFILE

SCALE: 1" = 20' HORIZ.
1" = 4' VERT.

NOTE:
THE ELEVATIONS ON THIS DRAWING ARE BASED ON NORTH AMERICAN VERTICAL DATUM OF 1988 (NAVD88). NGVD29 = NAVD88 + 1.125FT. AT THIS LOCATION

TKW CONSULTING ENGINEERS®
5621 Banner Drive
Fort Myers, Florida 33912
TEL: 239.278.1992 • FAX: 239.278.0922
E-MAIL: info@tkwonline.com
Engineering Certification # 5762

Consultant

Owner

NorthPort FLORIDA
CITY OF NORTH PORT UTILITIES

Project

CITY OF NORTH PORT BRIDGE WATER PIPELINE REPLACEMENT

Issued For

PERMITTING

Issued On: AUGUST 2018

Revisions

REV. NO.	DATE	DESCRIPTION

0 1/2 1
BAR MEASURES 1 INCH ON FULL SIZE DRAWING

Engineer

Douglas H. Eckmann, PE Date
Florida Registration No. 47259

Drawing Data

SCALE: AS SHOWN
DRAWN BY: SMR
CHECKED BY: DHE

Drawing Title

WATER MAIN REPLACEMENT PLAN & PROFILE STA. 10+58 - 15+15

Drawing Number

C101

SHEET 05 OF 08

TKW Project No.: 16919.07

Plotted: 8/9/2018 | Page Setup Name: ---- | Printer/Plotter Name: HP LaserJet 5000 Series PCL | Plot Style Table: TKW-EnvEng-Civil.stb | Plotted By: Maureen Tomlinson | Layout: C101
Plotted Drawing Path and Name: P:\Envir Engin\Clients\City of North Port Bridge Water Pipeline Replacement N Cranberry Blvd. 16919-07 dwg\02-Plan Set\C101.dwg

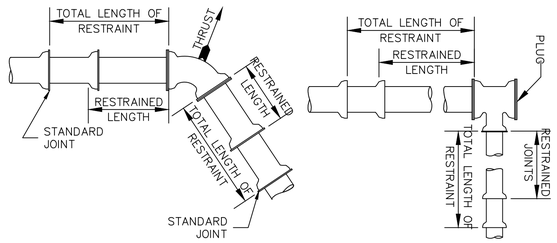

RESTRAINED JOINTS STANDARD

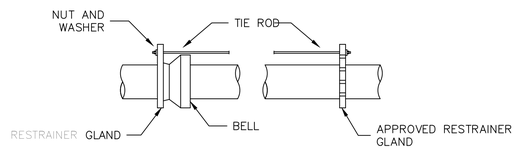

NOTE: TIE RODS TO BE FIELD COATED WITH BITUMINOUS COATING.

DETAIL PUSH-ON JOINT

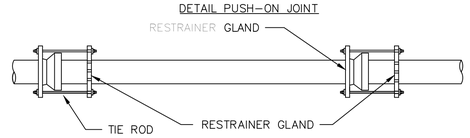

METHOD OF RESTRAINING PUSH-ON JOINT PIPE

FOLLOWING THE TABLE APPROVED BY THE UTILITY DEPARTMENT FOR REQUIRED LENGTH OF RESTRAINING JOINT.

RESTRAINED JOINTS

SUB-AQUEOUS DITCH CROSSING

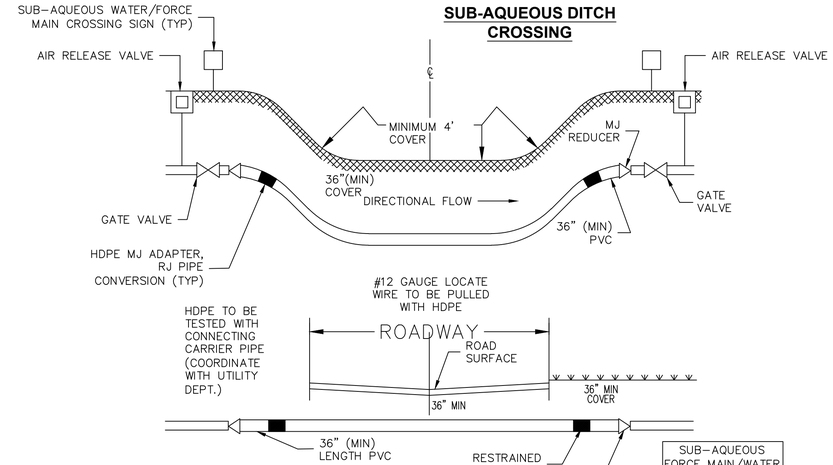

1. HIGH DENSITY POLYETHYLENE PIPE INSTALLED IS TO BE ONE PIPE SIZE LARGER IN DIAMETER TO ALLOW SAME INSIDE DIAMETER AS ADJOINING CARRIER PIPE.
2. HIGH DENSITY POLYETHYLENE PIPE IS TO BE CONNECTED TO THE CARRIER PIPE WITH A RESTRAINED HDPE MJ ADAPTER/REDUCER WITH SS SLEEVE.
3. HIGH DENSITY POLYETHYLENE PIPE IS TO BE COLOR CODED: BLUE-WATER, GREEN-SEWER/FORCE MAIN, PURPLE-REUSE.
4. GATE VALVES ARE TO BE USED ON WATER MAINS

SUB-AQUEOUS FORCE MAIN/WATER MAIN CROSSING

IN CASE OF EMERGENCY CALL NORTH PORT UTILITY DEPARTMENT 240-8000

SUB-AQUEOUS WATER/FORCE MAIN CROSSING DETAIL

HIGH DENSITY POLYETHYLENE PIPE DIRECTIONAL BORE

LOCATION OF PUBLIC WATER SYSYEM MAINS IN ACCORDANCE WITH F.A.C. RULE 62-555.314

Other Pipe	Horizontal Separation	Crossings (1)	Joint Spacing @ Crossings (Full Joint Centered)
Storm Sewer, Stormwater Force Main, Reclaimed Water (2)	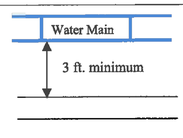	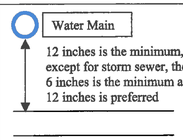 12 inches is the minimum, except for storm sewer, then 6 inches is the minimum and 12 inches is preferred	Alternate 3 ft. minimum 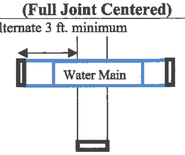
Vacuum Sanitary Sewer	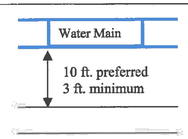	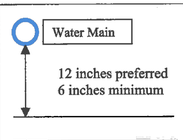 12 inches preferred 6 inches minimum	Alternate 3 ft. minimum 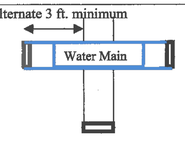
Gravity or Pressure Sanitary Sewer, Sanitary Sewer Force Main, Reclaimed Water (4)	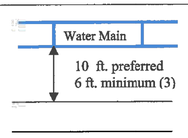	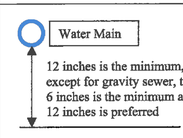 12 inches is the minimum, except for gravity sewer, then 6 inches is the minimum and 12 inches is preferred	Alternate 6 ft. minimum 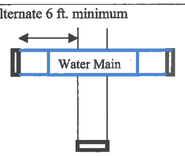
On-Site Sewage Treatment & Disposal System	10 ft. minimum	---	---

(1) Water main should cross above other pipe. When water main must be below other pipe, the minimum separation is 12 inches.
(2) Reclaimed water regulated under Part III of Chapter 62-610, F.A.C.
(3) 3 ft. for gravity sanitary sewer where the bottom of the water main is laid at least 6 inches above the top of the gravity sanitary sewer.
(4) Reclaimed water not regulated under Part III of Chapter 62-610, F.A.C.

Disclaimer – This document is provided for your convenience only. Please refer to F.A.C. Rule 62-555.314 for additional construction requirements.

RESTRAINED LENGTH IN FEET (WATER / REUSE)

NOMINAL DIAMETER (IN.)	VERTICAL DOWN BEND / OFFSET 45 DEGREE UPPER	45 DEGREE LOWER	22.5 DEGREE UPPER	22.5 DEGREE LOWER	11.25 DEGREE UPPER	11.25 DEGREE LOWER
4	21	7	10	3	5	2
6	30	10	14	5	7	2
8	39	13	19	6	9	3
10	47	15	23	7	11	4
12	55	18	27	8	13	4
14	63	20	30	10	15	5
16	71	22	34	11	17	5
18	79	25	38	12	19	6
20	86	27	41	13	20	6
24	100	31	48	15	24	7

RESTRAINED LENGTH IN FEET (WATER / REUSE)

NOMINAL DIAMETER (IN.)	HORIZONTAL BEND 90 DEGREE	45 DEGREE	22.5 DEGREE	11.25 DEGREE
4	17	7	3	2
6	24	10	5	2
8	31	13	6	3
10	36	15	7	4
12	43	18	8	4
14	48	20	10	5
16	54	22	11	5
18	59	25	12	6
20	64	27	13	6
24	74	31	15	7

RESTRAINED LENGTH IN FEET (WATER / REUSE)

NOMINAL DIAMETER (IN.)	REDUCER	IN-LINE VALVE OR DEAD END	TEE BRANCH
4	16	51	31
6	48	72	51
8	68	94	74
10	92	113	92
12	97	134	112
14	121	152	131
16	145	172	150
18	149	190	167
20	168	208	186
24	179	243	220

RESTRAINED LENGTH IN FEET (FORCE MAIN)

NOMINAL DIAMETER (IN.)	VERTICAL DOWN BEND / OFFSET 45 DEGREE UPPER	45 DEGREE LOWER	22.5 DEGREE UPPER	22.5 DEGREE LOWER	11.25 DEGREE UPPER	11.25 DEGREE LOWER
4	13	4	6	2	3	1
6	18	6	9	3	4	1
8	23	8	11	4	6	2
10	28	9	14	4	7	2
12	33	11	16	5	8	3
14	38	12	18	6	9	3
16	43	13	20	6	10	3
18	47	15	23	7	11	3
20	52	16	25	8	12	4
24	60	18	29	9	14	4

RESTRAINED LENGTH IN FEET (FORCE MAIN)

NOMINAL DIAMETER (IN.)	HORIZONTAL BEND 90 DEGREE	45 DEGREE	22.5 DEGREE	11.25 DEGREE
4	10	4	2	1
6	14	6	3	1
8	18	8	4	2
10	22	9	4	2
12	26	11	5	3
14	29	12	6	3
16	32	13	6	3
18	36	15	7	3
20	39	16	8	4
24	44	18	9	4

RESTRAINED LENGTH IN FEET (FORCE MAIN)

NOMINAL DIAMETER (IN.)	REDUCER	IN-LINE VALVE OR DEAD END	TEE BRANCH
4	10	31	1
6	29	43	12
8	46	57	25
10	55	68	36
12	70	80	48
14	73	91	59
16	87	103	70
18	89	114	81
20	101	125	91
24	107	146	111

RESTRAINED JOINT TABLES FOR PVC PIPES

TKW CONSULTING ENGINEERS®
5621 Banner Drive
Fort Myers, Florida 33912
TEL: 239.278.1992 • FAX: 239.278.0922
E-MAIL: info@tkwonline.com
Engineering Certification # 5762

Consultant

Owner

NorthPort FLORIDA

CITY OF NORTH PORT UTILITIES

Project

CITY OF NORTH PORT BRIDGE WATER PIPELINE REPLACEMENT

Issued For

PERMITTING

Issued On: AUGUST 2018

Revisions

REV. NO.	DATE	DESCRIPTION
△		
△		
△		
△		
△		

0 1/2 1

BAR MEASURES 1 INCH ON FULL SIZE DRAWING

Engineer

Douglas H. Eckmann, PE Date
Florida Registration No. 47259

Drawing Data

SCALE: AS SHOWN
DRAWN BY: SMR
CHECKED BY: DHE

Drawing Title

DETAILS

Drawing Number

CD01

SHEET 06 OF 08

TKW Project No.: 16919.07

Plotted By: Maureen Tomlinson
Layout: CD01
Plot Style Table: TKW-EnvEng-Civil.stb
Printer/Plotter Name: HP LaserJet 5000 Series PCL
Page Setup Name: ---
Plotted: 8/8/2018
Plotted Drawing Path and Name: P:\Envir Engin\Clients\City of North Port Bridge Water Pipeline Replacement N Cranberry Blvd. 16919-07 dwg\02-Plan Set\CD01.dwg

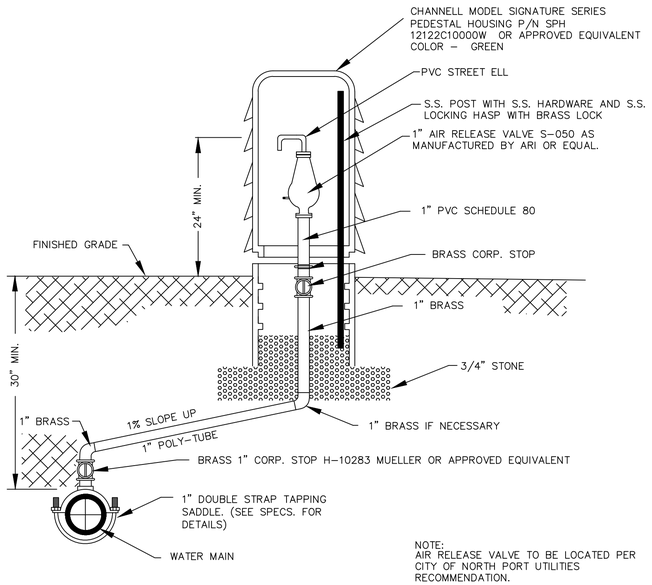

NOTE:
AIR RELEASE VALVE TO BE LOCATED PER CITY OF NORTH PORT UTILITIES RECOMMENDATION.

AUTOMATIC AIR RELEASE VALVE DETAIL

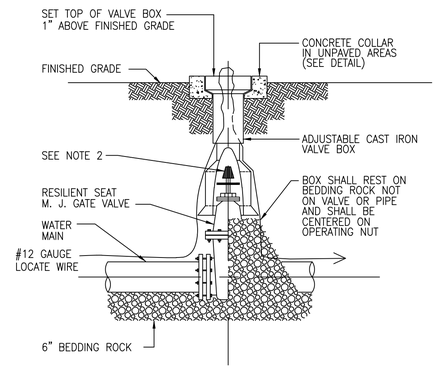

NOTES:

1. PVC EXTENSIONS MAY BE USED ON VALVE BOX INSTALLATION.
2. THE ACTUATING NUT FOR VALVES FOUR FOOT DEEP AND DEEPER SHALL BE EXTENDED TO WITHIN 6" OF FINAL GRADE.
3. LOOP #12 GAUGE LOCATE WIRE UP THRU VALVE BOX.
4. NO VALVES SHALL BE MORE THAN 4' DEEP UNLESS APPROVED BY N.P. UTILITIES.

TYPICAL GATE VALVE

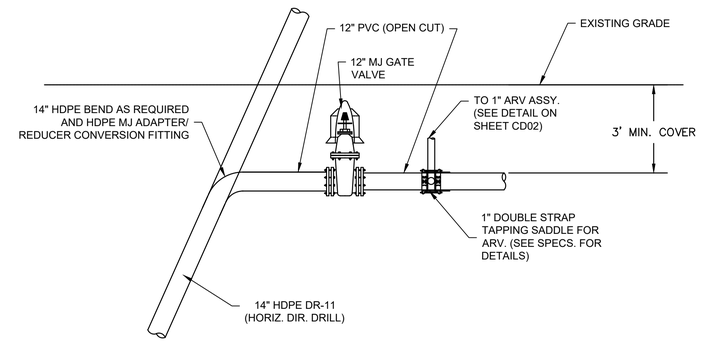

HDD TIE-IN DETAIL

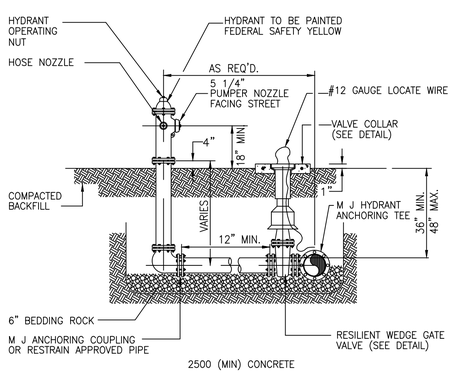

NOTES:

1. FIRE HYDRANT SHALL BE SUPPLIED WITHOUT A WEEP HOLE, OR WITH A PERMANENTLY PLUGGED WEEP HOLE.
2. WATER MAINS AND FIRE HYDRANTS ARE TO BE INSTALLED WITH 36" MINIMUM/ 48" MAXIMUM COVER UNLESS PRIOR APPROVAL BY NORTH PORT UTILITIES.
3. LOOP #12 GAUGE LOCATE WIRE UP THROUGH VALVE BOX.

FIRE HYDRANT ASSEMBLY DETAIL

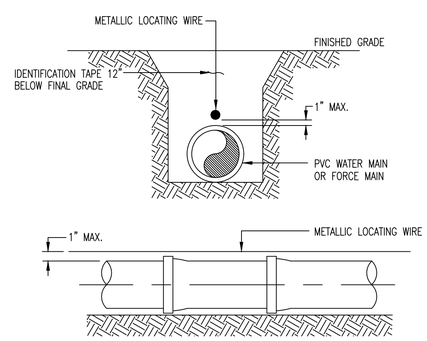

NOTES:
ALL WATER MAINS, FORCE MAINS AND REUSE MAINS SHALL REQUIRE INSULATED METALLIC LOCATING WIRE (12 GAUGE COPPER) CAPABLE OF DETECTION BY A CABLE LOCATOR AND SHALL BE BURIED DIRECTLY ABOVE THE CENTERLINE OF THE PIPE. LOCATING WIRE SHALL TERMINATE AT THE TOP OF EACH VALVE BOX AND BE CAPABLE OF EXTENDING 12" ABOVE TOP OF BOX IN SUCH A MANNER SO AS NOT TO INTERFERE WITH VALVE OPERATION.
USE DUCT TAPE AS NECESSARY TO HOLD WIRE DIRECTLY ON THE TOP OF THE PIPE.

PVC PIPE LOCATING WIRE/TAPE DETAIL

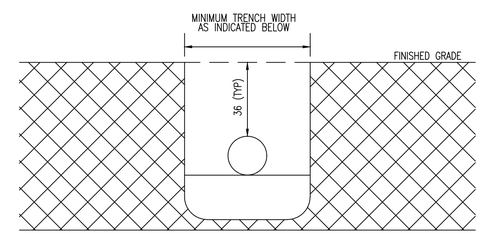

Nominal Pipe Size		Trench Width, Minimum		
Inches	mm.	No. of Pipe Diameters (O.D.)	Inches	mm.
4	100	4.3	18	455
6	150	2.9	18	455
8	200	2.9	24	610
10	250	2.5	26	660
12	300	2.4	30	760
15	380	2.0	30	760
18	475	1.8	32	815
21	560	1.6	34	865
24	630	1.5	36	915
27	710	1.5	40	1020
30	762	1.4	42	1067
33	838	1.4	45	1143
36	915	1.4	48	1219
42	1067	1.4	54	1372
48	1219	1.3	60	1524

1. PIPE TO BE INSTALLED WITH 36" (MIN) AND 48" (MAX) COVER UNLESS OTHERWISE APPROVED BY NORTH PORT UTILITIES.
2. BACKFILL MATERIAL TO BE APPLIED IN 1' LIFTS AND COMPACTED TO A MINIMUM 98% OF THE DRY DENSITY.
3. ONE (1) COMPACTION TEST LOCATION SHALL BE REQUIRED FOR EACH 300 LINEAR FEET PER 1' OF BACKFILL LIFT OF PIPE AND FOR EVERY 100 SQUARE FEET OF BACKFILL AROUND STRUCTURES AS A MINIMUM.
4. ONE (1) COMPACTION TEST LOCATION SHALL BE REQUIRED BETWEEN TWO STRUCTURES 25' (OR MORE) APART.
5. THE TOP THREE FEET OF ANY TRENCH UNDER A ROAD CROSSING, DRIVEWAY OR STRUCTURE SHALL BE COMPACTED TO A MINIMUM 98% OF THE MAXIMUM DRY DENSITY AS PER AASHTO T–180.

MINIMUM TRENCH WIDTH AND TRENCH RESTORATION DETAIL

TKW CONSULTING ENGINEERS
5621 Banner Drive
Fort Myers, Florida 33912
TEL: 239.278.1992 • FAX: 239.278.0922
E-MAIL: info@tkwonline.com
Engineering Certification # 5762

Consultant

Owner

NorthPort FLORIDA
CITY OF NORTH PORT UTILITIES

Project

CITY OF NORTH PORT BRIDGE WATER PIPELINE REPLACEMENT

Issued For

PERMITTING

Issued On: AUGUST 2018

Revisions

REV. NO.	DATE	DESCRIPTION

0 1/2 1
BAR MEASURES 1 INCH ON FULL SIZE DRAWING

Engineer

Douglas H. Eckmann, PE Date
Florida Registration No. 47259

Drawing Data

SCALE: AS SHOWN
DRAWN BY: SMR
CHECKED BY: DHE

Drawing Title

DETAILS

Drawing Number

CD02

SHEET 07 OF 08

TKW Project No.: 16919.07

Plotted: 8/8/2018 Page Setup Name: ---- Printer/Plotter Name: HP LaserJet 5000 Series PCL Plot Style Table: TKW-EnvEng-Civil.stb Plotted By: Maureen Tomlinson
Plotted Drawing Path and Name: P:\Envir Engin\Clients\City of North Port Bridge Water Pipeline Replacement N Cranberry Blvd. 16919-07 dwg\02-Plan Set\CD02.dwg Layout: CD02

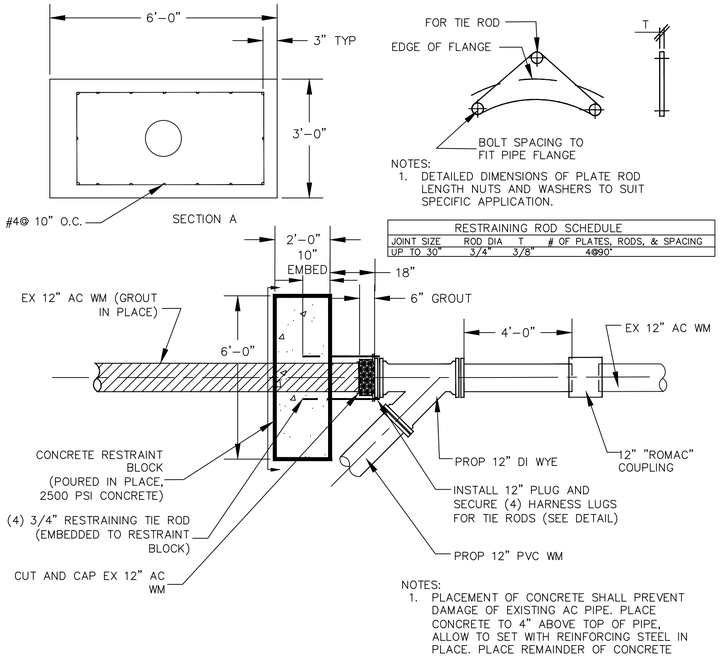

NOTES:
1. DETAILED DIMENSIONS OF PLATE ROD LENGTH NUTS AND WASHERS TO SUIT SPECIFIC APPLICATION.

RESTRAINING ROD SCHEDULE

JOINT SIZE	ROD DIA	T	# OF PLATES, RODS, & SPACING
UP TO 30"	3/4"	3/8"	4@90°

NOTES:
1. PLACEMENT OF CONCRETE SHALL PREVENT DAMAGE OF EXISTING AC PIPE. PLACE CONCRETE TO 4" ABOVE TOP OF PIPE, ALLOW TO SET WITH REINFORCING STEEL IN PLACE. PLACE REMAINDER OF CONCRETE

AC WATER MAIN TIE-IN DETAIL

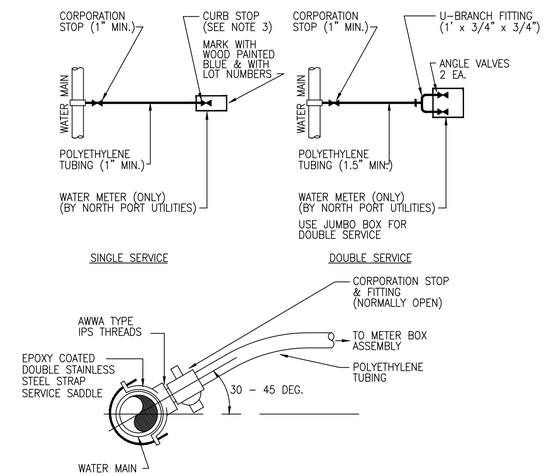

NOTES:
1. ALL FITTINGS SHALL BE BRASS WITH COMPRESSION TYPE CONNECTIONS.
2. NO SERVICE LINE SHALL TERMINATE UNDER A DRIVEWAY.
3. EACH SERVICE SHALL TERMINATE AT A CURB STOP(S) OR U-BRANCH AND SHALL BE CLEARLY MARKED WITH A 2" X 4" X 8' STAKE WITH THE TOP PAINTED BLUE AND MARKED WITH THE NUMBER OF THE LOT(S) TO BE SERVED. CONTRACTOR TO PROVIDE CURB STOP LOCKING DEVICES TO CITY UTILITIES AT THE TIME OF TESTING.
4. NO SCHEDULE 40 OR SCHEDULE 80 PVC WILL BE ACCEPTED FOR WATER SERVICE CONNECTIONS.
5. INSTALL CITY APPROVED POLYETHYLENE TUBING.
6. METER BOX WILL BE SET TO FINAL GRADE.

WATER SERVICE CONNECTION DETAIL

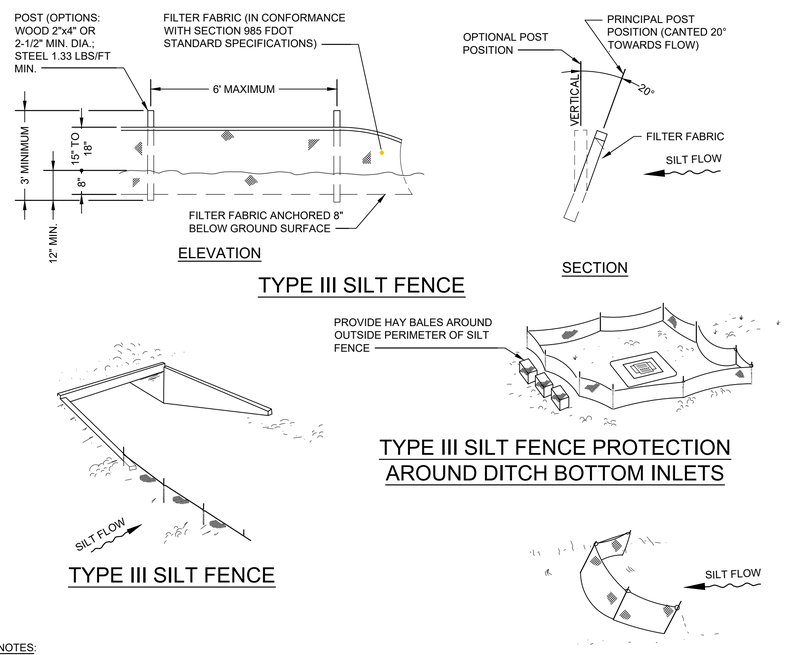

NOTES:
1. DO NOT DEPLOY IN A MANNER THAT SILT FENCES WILL ACT AS A DAM ACROSS PERMANENT FLOWING WATERCOURSES. SILT FENCES ARE TO BE USED AT UPLAND LOCATIONS AND TURBIDITY BARRIERS USED AT PERMANENT BODIES OF WATER.
2. SPACING FOR TYPE III SILT FENCE SHALL BE IN ACCORDANCE WITH SPACING CHART AND DRAINAGE STRUCTURES PROTECTION DETAIL.

SILT FENCE APPLICATIONS

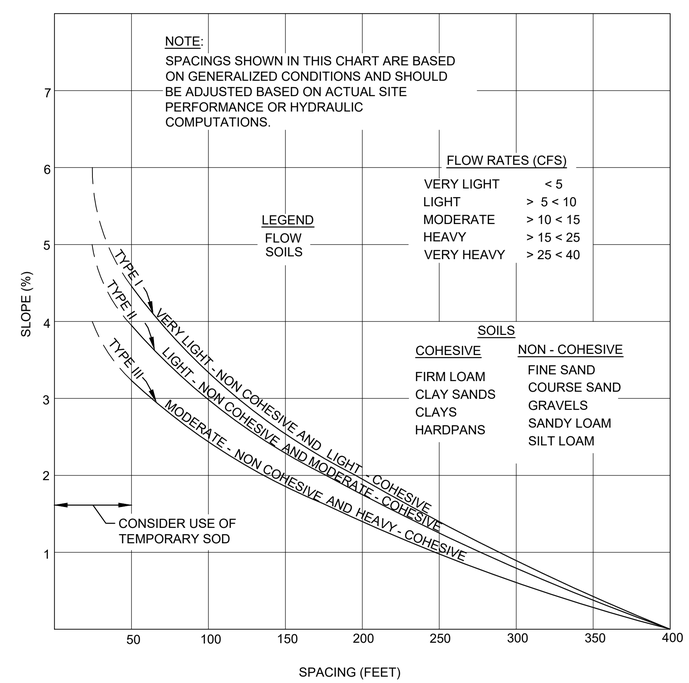

SPACING FOR TYPE I AND TYPE II HAY BALE BARRIERS AND TYPE III SILT FENCES

TKW CONSULTING ENGINEERS
5621 Banner Drive
Fort Myers, Florida 33912
TEL: 239.278.1992 • FAX: 239.278.0922
E-MAIL: info@tkwonline.com
Engineering Certification # 5762

Consultant

Owner

CITY OF NORTH PORT UTILITIES

Project

CITY OF NORTH PORT BRIDGE WATER PIPELINE REPLACEMENT

Issued For

PERMITTING

Issued On: AUGUST 2018

Revisions

REV. NO.	DATE	DESCRIPTION

0 1/2 1
BAR MEASURES 1 INCH ON FULL SIZE DRAWING

Engineer

Douglas H. Eckmann, PE Date
Florida Registration No. 47259

Drawing Data

SCALE: AS SHOWN
DRAWN BY: SMR
CHECKED BY: DHE

Drawing Title

DETAILS

Drawing Number

CD03

SHEET 08 OF 08

TKW Project No.: 16919.07

Plotted By: Maureen Tomlinson
Layout: CD03
Plot Style Table: TKW-EnvEng-Civil.stb
Printer/Plotter Name: HP LaserJet 5000 Series PCL
Page Setup Name: ----
Plotted: 8/8/2018
Plotted Drawing Path and Name: P:\Envir Engin\Clients\City of North Port Bridge Water Pipeline Replacement N Cranberry Blvd. 16919-07 dwg\02-Plan Set\CD03.dwg

RFB 2019-35

NORTH PORT UTILITIES

CRANBERRY WM REPLACEMENT

ITEM	DESCRIPTION	QUANTITY	UNIT	UNIT PRICE	COST
5	14" HDPE DR-11 Water Main (Subaqueous HDD) STA 15 + 15 TO STA 10 + 58 w HDPE A	430	LF	$0.00	$ -
6	12" PVC Potable Water Main, DR-18 (Open Cut)	60	LF	$0.00	$ -
7	12" Potable Water 45° Bends, MJ	4	EA	$0.00	$ -
8	12" Gate Valves, MJ, With Valve Boxes	2	EA	$0.00	$ -
9	12" TIE INS TO EXISTING AC WM's w Thrust Blocks	2	EA	$0.00	$ -
10	1" Potable ARV Assy	2	EA	$0.00	$ -
11	Potable Service Connections, Residential (1" Re-connections to Existing Meters)	1	EA	$0.00	$ -
12	Abandon In Place With Flowable Fill 12" AC Potable Water Mains (320 LF)	10	CY	$0.00	$ -
13	Remove the existing steel pipe (100LF) and hardware. Cut flush with abutment and mortar	1	LS	$0.00	$ -
14	Concrete Sidewalk Restoration (4" Thick)	5	SY	$0.00	$ -
15	Sodding	24	SY	$0.00	$ -
	SUB TOTAL ITEMS 5 - 15				$ -
1	Mobilization (Maximum 6% of Total Base Bid)	1	LS	$0.00	$ -
2	Maintenance of Traffic	1	LS	$0.00	$ -
3	Field Layout and Record Drawings	1	LS	$0.00	$ -
4	Closeout	1	LS	$0.00	$ -
	TOTAL COST ESTIMATE				$ -

Date:

Signed (Person authorized to bind the company):

Name (printed): Title:

North Port Utilities Approved Material List

Updated 6-1-2018

1. DUCTILE IRON PIPE
    a. American
    b. McWane
    c. U.S. Pipe and Foundry

2. PVC PIPE FORCE MAIN DR 18(Green)
    a. Certainteed/North American Pipe Company
    b. J-M Manufacturing
    c. Diamond
    d. National Pipe & Plastics

3. PVC PIPE GRAVITY DR26(Green)_
    a. Certainteed/North American Pipe Company
    b. J-M Manufacturing
    c. Diamond
    d. National Pipe & Plastics

4. PVC PIPE WATERMAIN DR 18(Blue)
    a. Certainteed/North American Pipe Company
    b. J-M Manufacturing
    c. Diamond
    d. National Pipe & Plastics

5. PVC PIPE for Conflicts DR14
    a. Certainteed/North American Pipe Company
    b. J-M Manufacturing
    c. Diamond
    d. National Pipe & Plastics

6. POLYTUBING
    a. Endot

7. GATEVALVES
    a. Mueller
    b. Clow/Kennedy
    c. American

8. BUTTERFLY VALVES
    a. Mueller
    b. Clow/Kennedy
    c. Valvematic

9. PLUG VALVES
    a. Valmatic
    b. Pratt

10. TAP VALVES
    a. American
    b. Mueller

11. CHECK VALVES
    a. American
    b. Mueller

12. AIR RELEASE VALVES
    a. A.R.I. D-040 or A.R.I. D-025 (sewer specific)
    b. Valve Matic
    c. Apco-air vent valve

13. CURB STOPS(no set screw styles)
    a. Ford
    b. Mueller

14. CORP STOPS(no set screw styles)
    a. Ford
    b. Mueller

15. ANGLE VALVES(no set screw styles)
    a. Ford
    b. Mueller

16. U-Branches
    a. Ford
    b. Mueller

17. MJ FITTINGS
    a. U.S. Pipe and Foundry
    b. American Cast Iron Pipe
    c. Tyler Union
    d. SIP Industries

18. FIRE HYDRANTS
    a. Mueller
    b. Clow Medallion
    c. Kennedy
    d. American

19. TAP SLEEVES(Stainless steel only)
    a. Ford
    b. JCM – 432
    c. Cascade
    d. American
    e. TPS

20. TAP SADDLES(Epoxy coated w/double straps)
    a. Smith-Blair
    b. Mueller
    c. Ford
    d. JCM
    e. TPS

21. BLOWOFFS
    a. Kupperle TF550
    b. Hydroguard- Automatic Blowoff

22. METER BOXES
    a. CDR
    b. Polyplastics
    c. Carson Brooks
    d. NDS
    e. Glasmasters

23. VALVE BOXES
    a. Tyler Union
    b. Russco
    c. Opelika Foundry
    d. SIP Industries

24. PERMANENT SAMPLING POINTS
    a. Kupperle Foundry- Eclipse 88

25. POLYETHYLENE ENCLOSURES
    a. LJ Ruffin

26. BRASS VALVE MARKER TAGS
    a. Wagco Markers

27. BELL RESTRAINTS
    a. Ford Uniflange
    b. Ebaa-Iron series 1500
    c. Sigma
    d. SIP Industries –EZ Grip PTP Series

28. UNI FLANGES
    a. Ford UFR 1390s-x

29. RESTRAINTS
    a. Sigma series 3000,4000
    b. Stargrip
    c. Ebaa Iron series 2000 PV Megalug
    d. SIP Industries EZ Grips

30. GRAVITY SEWER FITTINGS
    a. Harco
    b. Tigre, USA

31. CLEANOUT COVER
    a. U.S. Foundry

32. HDPE to DUCTILE IRON ADAPTERS
    a. Independent Pipe Products

33. LIFT STATION PUMPS
    a. FLYGT pumps

34. MANHOLE FRAMES AND COVERS
    a. U.S. Pipe and Foundry

35. CASING SPACERS (stainless steel)
    a. Cascade

36. MANHOLE and LIFT STATION WET WELL SURFACE COATINGS (for any manholes with force main discharged into them including the next one downstream, any drop manholes, lift stations and the two manholes upstream from any lift station)
    a. I.E.T Systems
    b. Raven 405
    c. Green Monster Liner (GML)

37. LIFT STATION PANEL
    a. FLYGT (per the North Port Utility Specs)

38. SCADA SYSTEM
    a. Data Flow System (per the North Port Utility Specs)

City of North Port

FINANCE DEPARTMENT/PURCHASING DIVISION
4870 CITY HALL BLVD, STE 337
NORTH PORT, FLORIDA 34287
Office: 941.429.7170
Fax: 941.429.7173
Email: purchasing@cityofnorthport.com

December 14, 2018

ADDENDUM 1

TO: PROSPECTIVE BIDDERS

RE: RFB NO. 2019-40 Cranberry Bridge Crossing Water Main Replacement

DUE DATE January 15, 2019

City Hall, Room 302 (Bids need to be delivered to Room 337 so they can be date and time stamped on or before 2:00 PM. Bid opening will commence in Room 302 shortly thereafter)

Bidders are hereby notified that this addendum shall be made part of the above-named bid and contract documents. The following changes to the above bid are issued to modify, and/or clarify the bid and contract documents (the deletions are as **~~strikethroughs~~** and additions as **underlined**). These items shall have the same force and effect as the original documents, and bids to be submitted on the specified date shall conform with the additions, deletions and revisions as listed herein.

ITEM #1: QUESTIONS/ANSWERS
Q1: For lane closures, is there a time limitation on how long we can have the lane closed?
A1: The City will require a MOT plan. The length of closure will have to be discussed and approved by the City before lane closures. There is not a time limitation on lane closures at this time.

Q2: Can the contractor use 12' fusible PVC for this project instead of HDPE?
A2: No
Firms are required to acknowledge receipt of this addendum on their proposal forms. All other terms and conditions of the original proposal and contract documents remain the same.

Keith Raney

Keith Raney, CPPB, CPPO
Contract Administrator II
Finance Department/Purchasing Division
4970 City Hall Blvd.
North Port, Florida 34286
Tel: 941.429.7103
Fax: 941.429.7173

E-mail: kraney@cityofnorthport.com

Receipt of Addendum No. 1 shall be noted within the Bid Form in the appropriate section.
End of Addendum No.1

City of North Port
FINANCE DEPARTMENT/PURCHASING DIVISION
4870 CITY HALL BLVD, STE 337
NORTH PORT, FLORIDA 34287
Office: 941.429.7170
Fax: 941.429.7173
Email: purchasing@cityofnorthport.com

December 28, 2018

ADDENDUM 2

TO: PROSPECTIVE BIDDERS

RE: RFB NO. 2019-40 Cranberry Bridge Crossing Water Main Replacement

DUE DATE January 15, 2019

City Hall, Room 302 (Bids need to be delivered to Room 337 so they can be date and time stamped on or before 2:00 PM. Bid opening will commence in Room 302 shortly thereafter)

Bidders are hereby notified that this addendum shall be made part of the above-named bid and contract documents. The following changes to the above bid are issued to modify, and/or clarify the bid and contract documents (the deletions are as ~~**strikethroughs**~~ and additions as **underlined**). These items shall have the same force and effect as the original documents, and bids to be submitted on the specified date shall conform with the additions, deletions and revisions as listed herein.

ITEM #1: QUESTIONS/ANSWERS

Q1: The Florida Trench Safety Act form for "Cranberry Bridge Crossing Water Main Replacement, #2019-40" is on 2 pages in the bid documents – pages 63 and 66. Do you want both completed or just one?

A1: Please use the Florida Trench Safety Act Form on Page 63 and Delete the Florida Trench Safety Act Form on page 66.

Keith Raney

Keith Raney, CPPB, CPPO
Contract Administrator II
Finance Department/Purchasing Division
4970 City Hall Blvd.
North Port, Florida 34286
Tel: 941.429.7103
Fax: 941.429.7173

E-mail: kraney@cityofnorthport.com

Receipt of Addendum No. 2 shall be noted within the Bid Form in the appropriate section.
End of Addendum No.2